PROPOSED RESIDENCE FOR

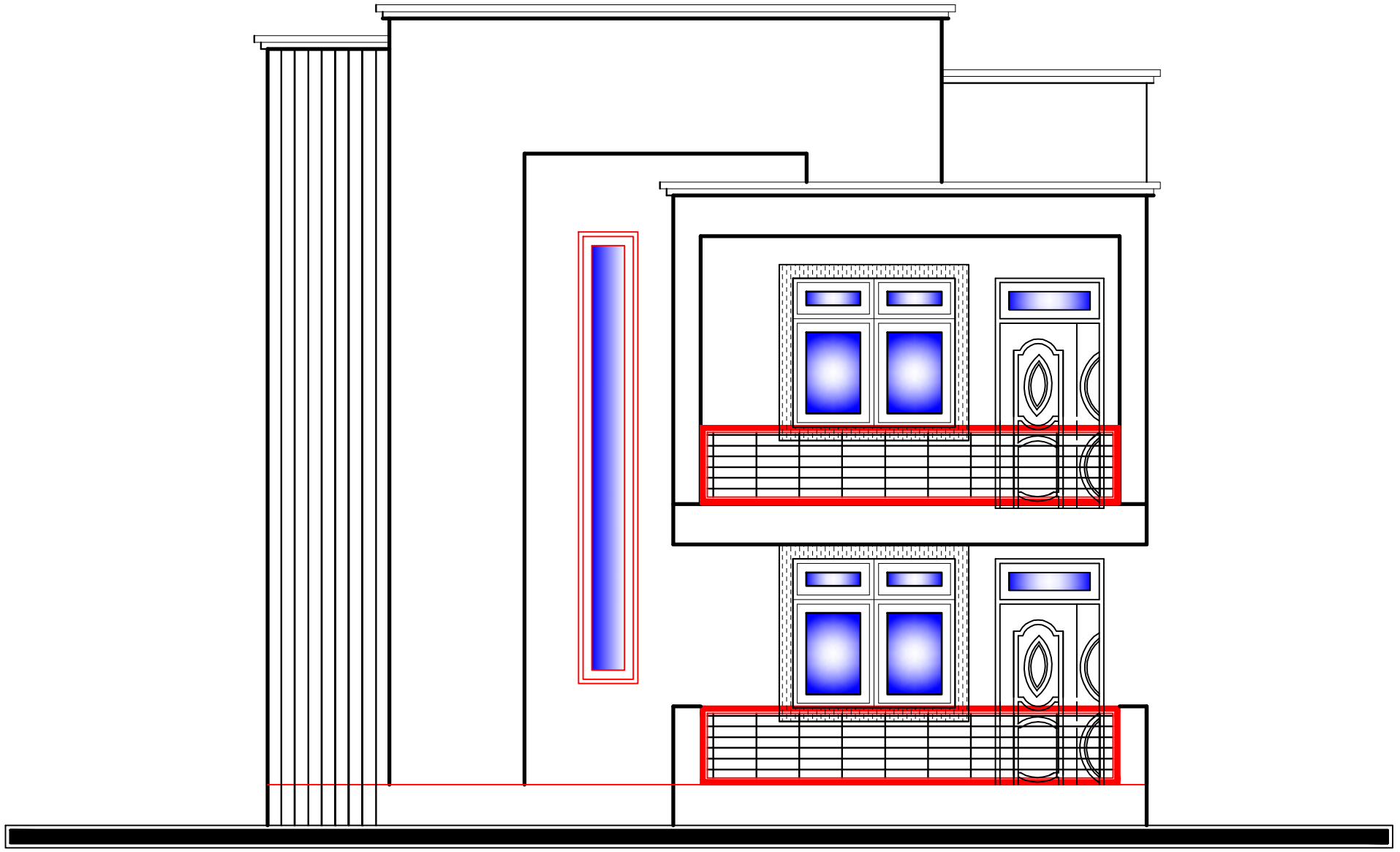

GA NORTH MUNICIPAL ASSEMBLY
AFIAMAN - GREATER ACCRA

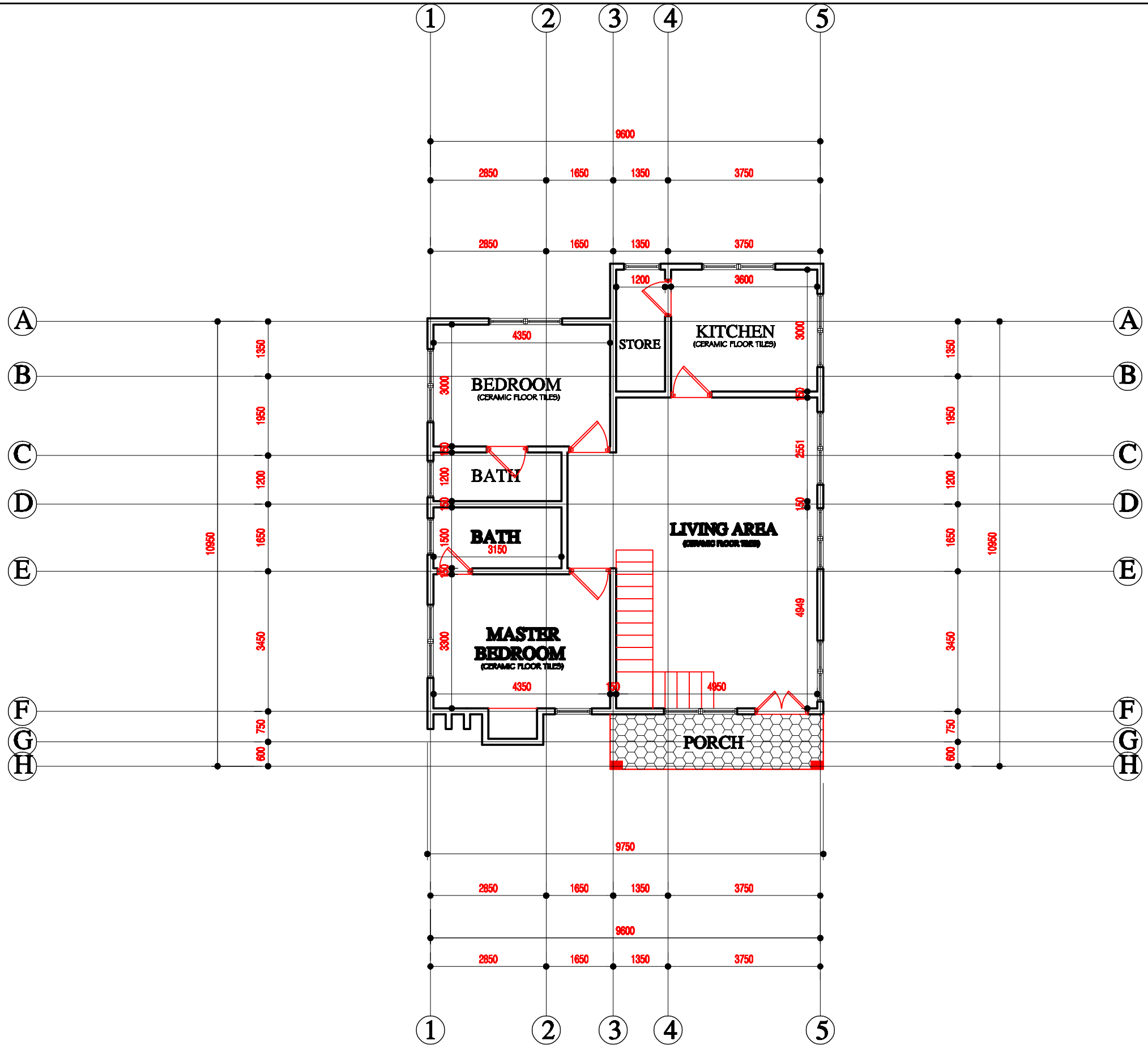

GROUND FLOOR PLAN

NOTES

1. Do not scale from drawings. Only figured dimensions to be worked to. When in doubt consult the Architech.
2. All dimensions are in millimitres

ARCHITECTURAL DRAWING

CLIENT :

GA NORTH MUNICIPAL ASSEMBLY

LOCATION :

AFIAMAN

DESCRIPTION

GROUND FLOOR PLAN

SCALE 1:100

AD

02

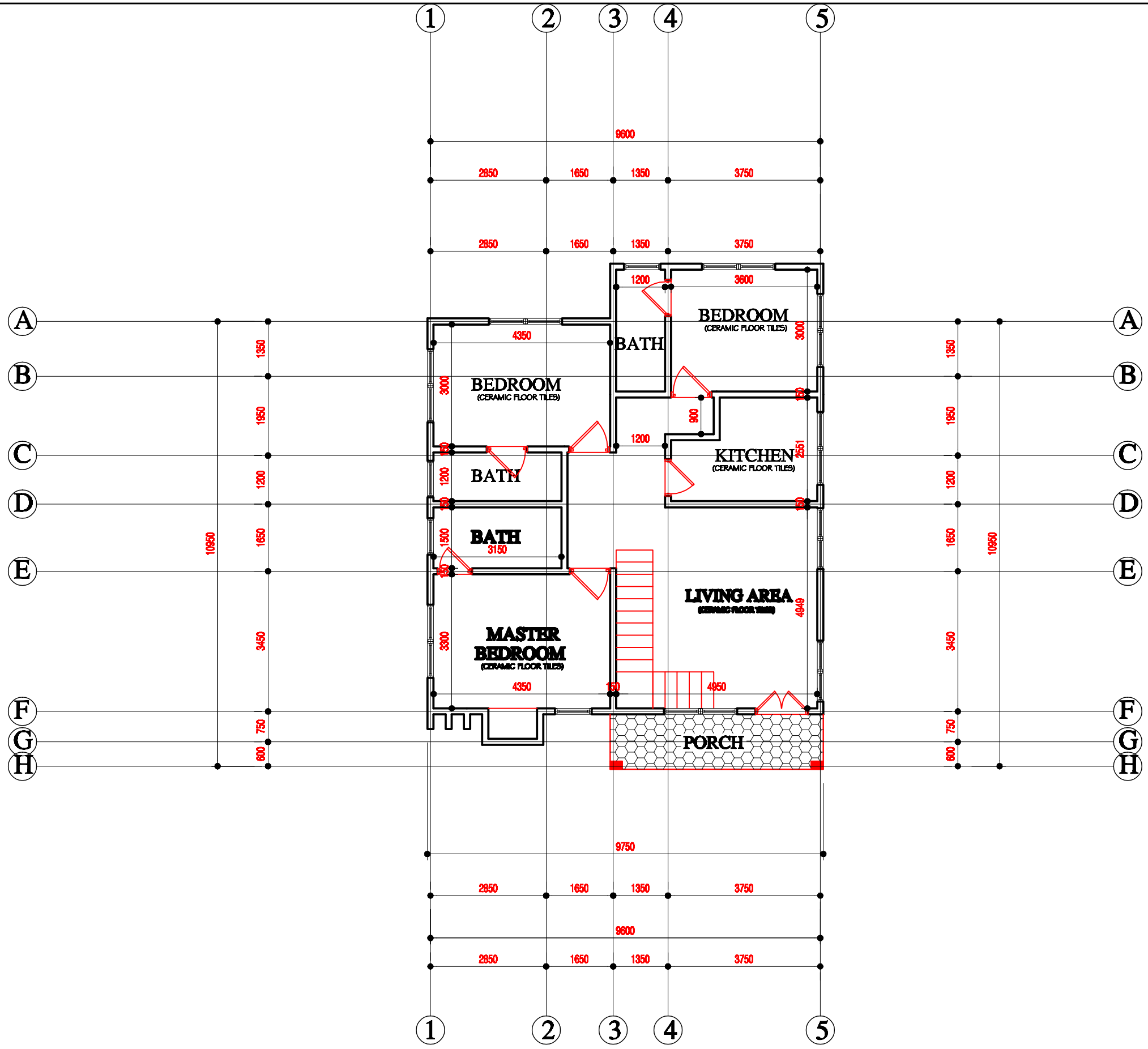

FIRST FLOOR PLAN

NOTES

1. Do not scale from drawings. Only figured dimensions to be worked to. When in doubt consult the Architech.
2. All dimensions are in millimitres

ARCHITECTURAL DRAWING

CLIENT :

GA NORTH MUNICIPAL ASSEMBLY

LOCATION :

AFIAMAN

DESCRIPTION

FIRST FLOOR PLAN

SCALE 1:100

AD

03

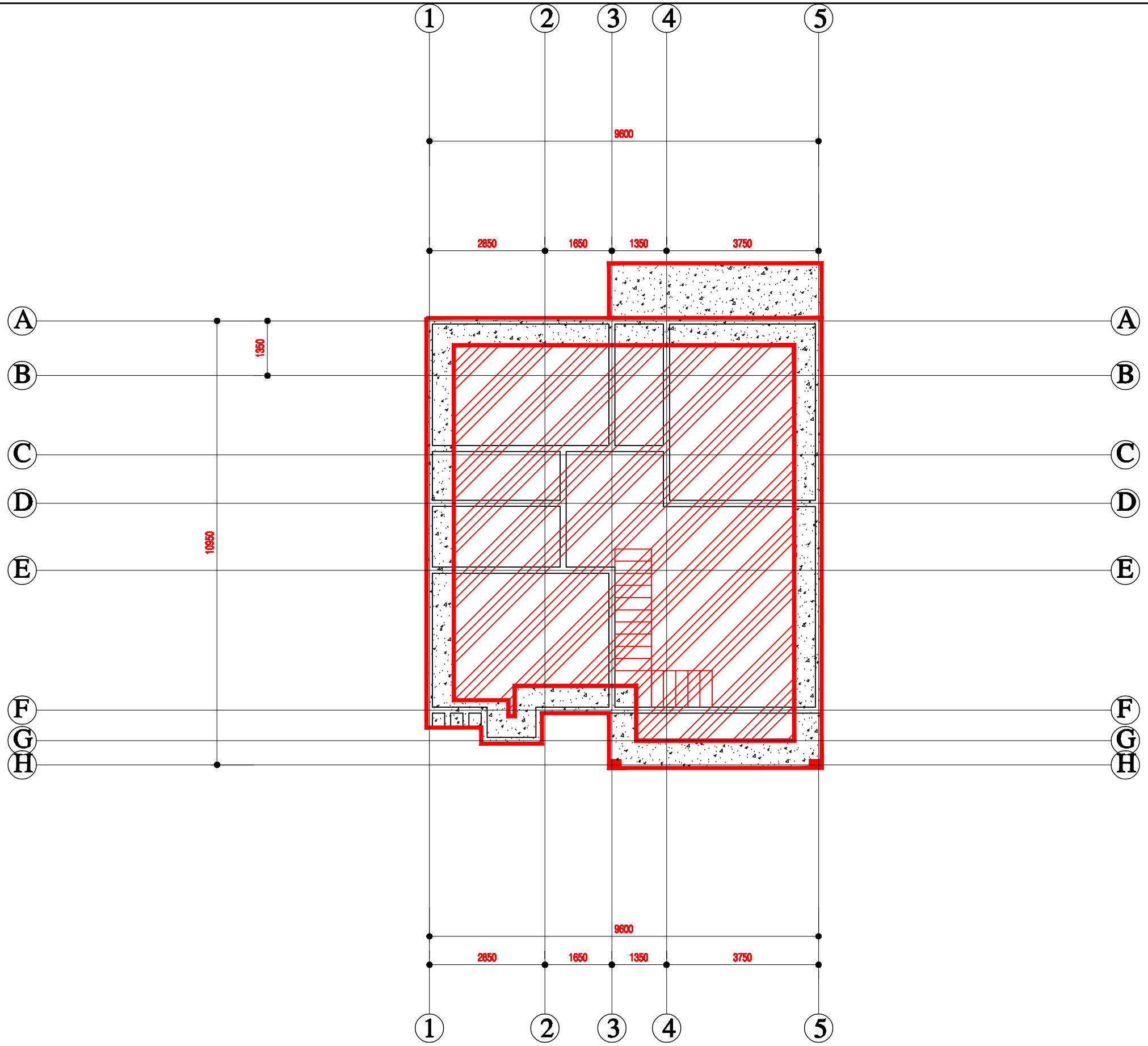

ROOF PLAN

NOTES

1. Do not scale from drawings. Only figured dimensions to be worked to. When in doubt consult the Architect.
2. All dimensions are in millimetres

ARCHITECTURAL DRAWING

CLIENT :

GA NORTH MUNICIPAL ASSEMBLY

LOCATION :

AFIAMAN

DESCRIPTION

ROOF PLAN

SCALE 1:100

CONTACT NO

AD

04

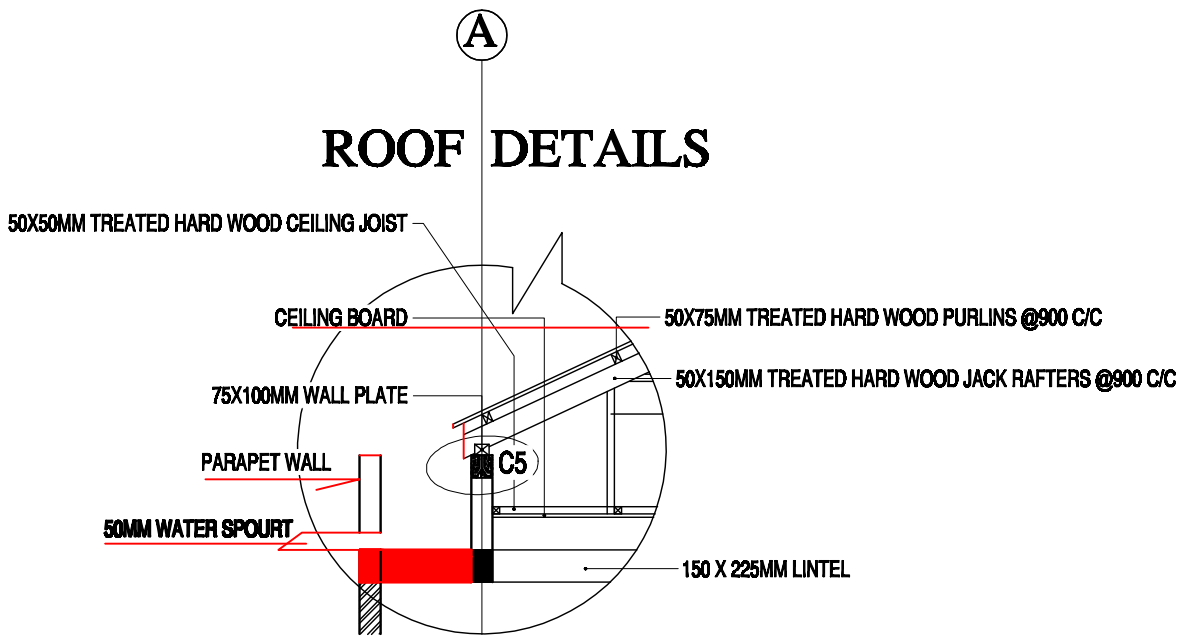

ROOF DETAILS

SECTION K

SCALE 1:50

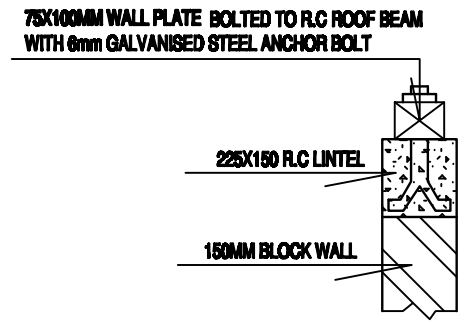

SECTION C5

SCALE 1:10

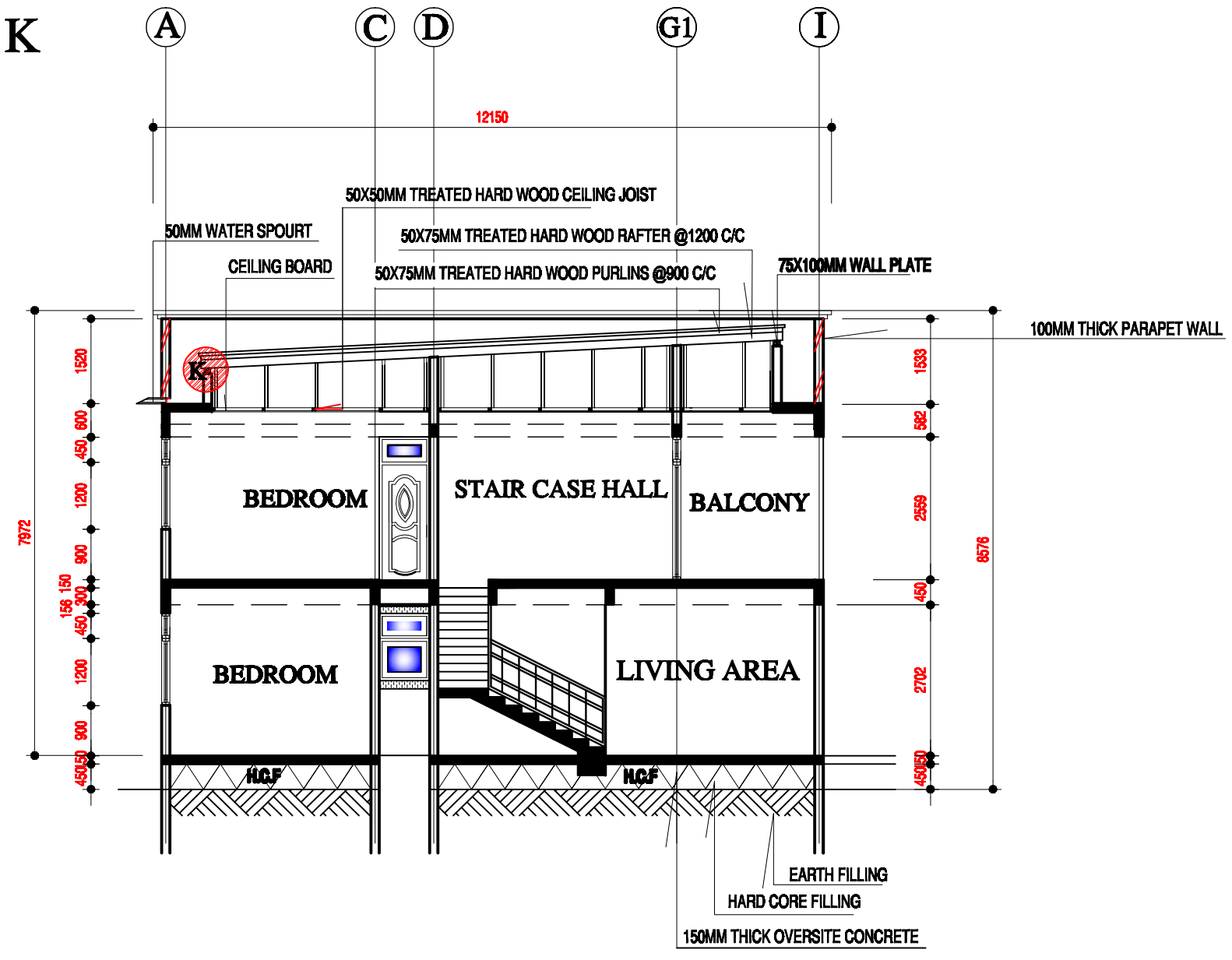

CROSS SECTION A-A

NOTES

1. Do not scale from drawings. Only figured dimensions to be worked to. When in doubt consult the Architech.
2. All dimensions are in millimetres

ARCHITECTURAL DRAWING

CLIENT :

GA NORTH MUNICIPAL ASSEMBLY

LOCATION :

AFIAMAN

DESCRIPTION

CROSS SECTION A-A

SCALE 1:100

ST 05

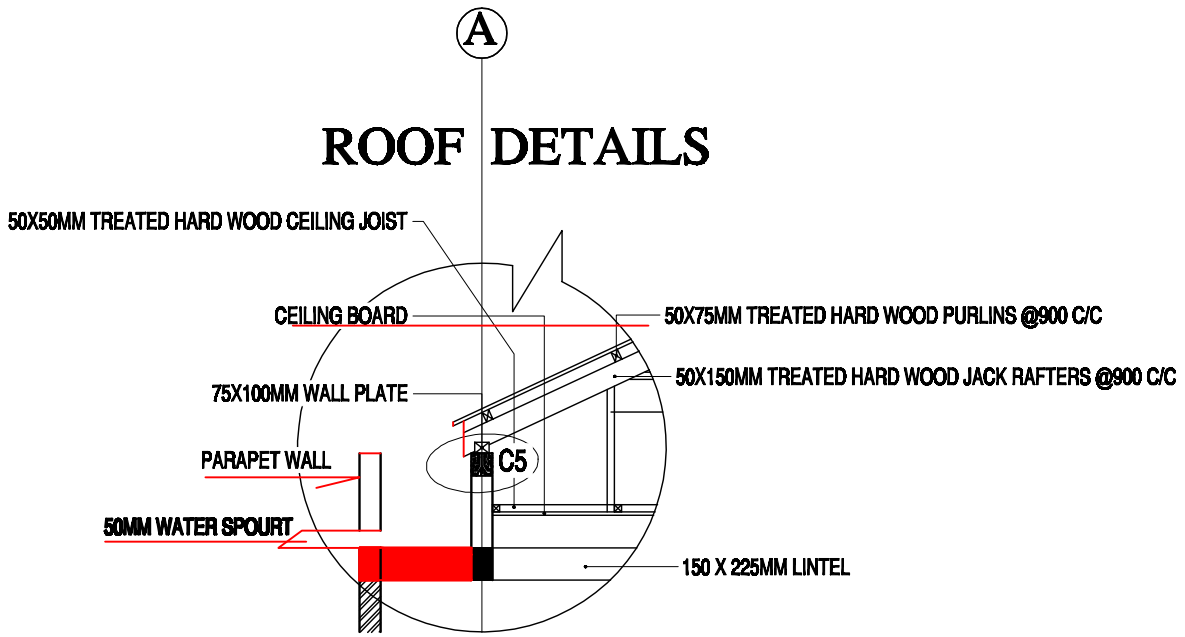

SECTION K
SCALE 1:50

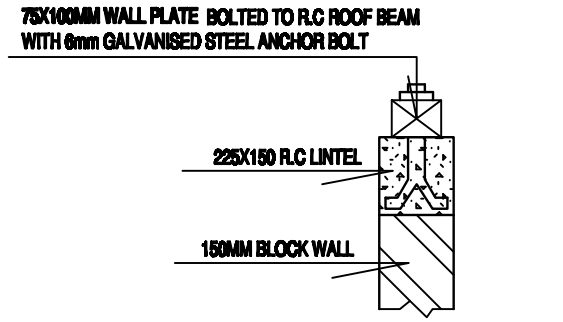

SECTION C5
SCALE 1:10

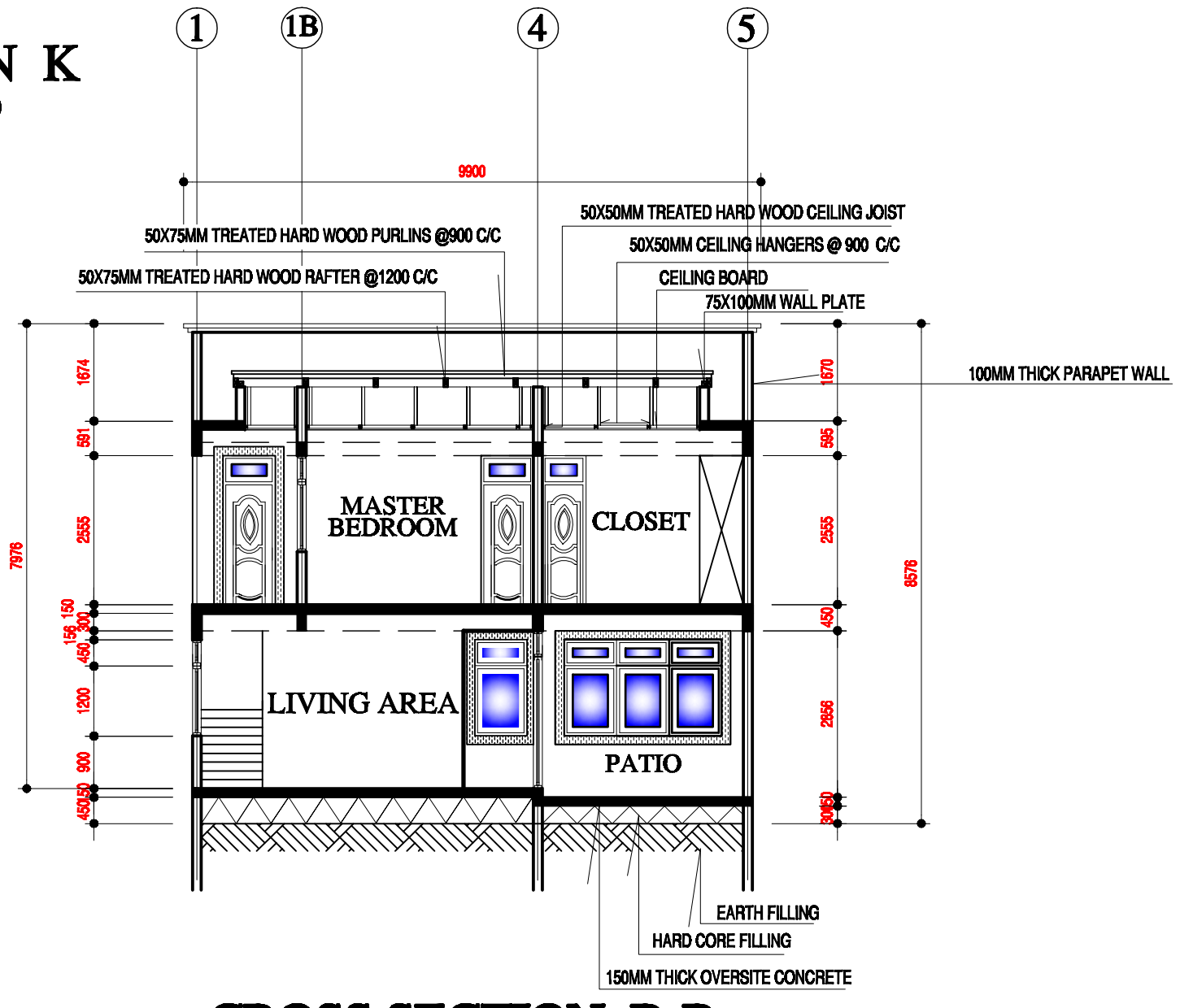

CROSS SECTION B-B

NOTES

1. Do not scale from drawings. Only figured dimensions to be worked to. When in doubt consult the Architect.
2. All dimensions are in millimetres

ARCHITECTURAL DRAWING

CLIENT :
GA NORTH MUNICIPAL ASSEMBLY

LOCATION :
AFIAMAN

DESCRIPTION
CROSS SECTION B-B

SCALE 1:100

ST | 06

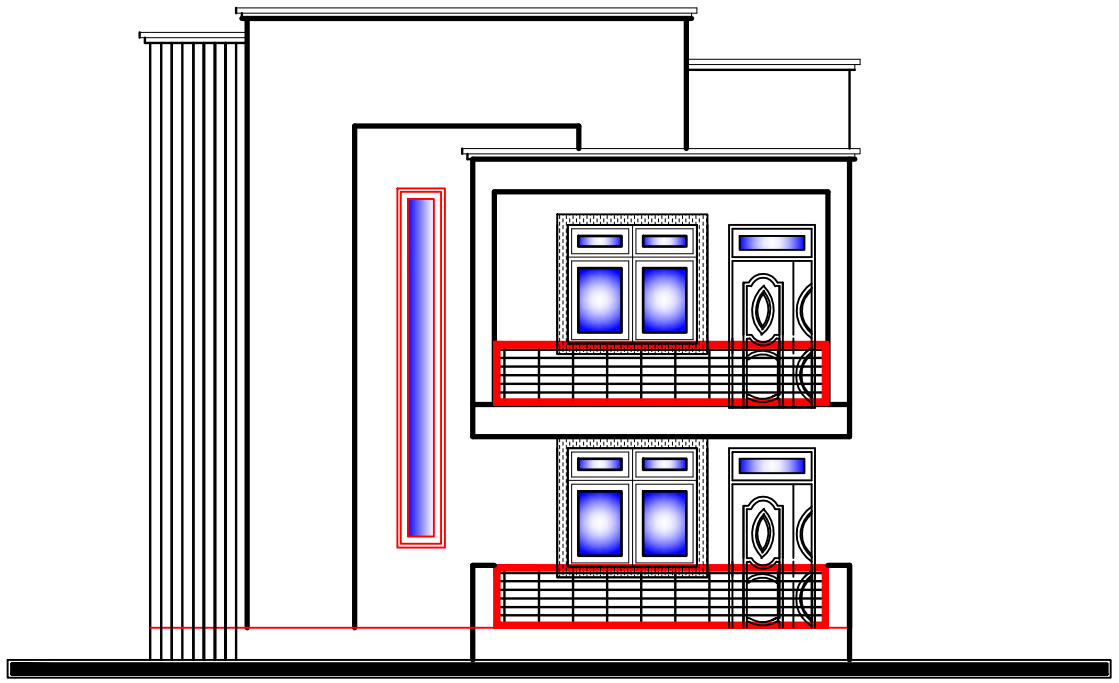

FRONT ELEVATION

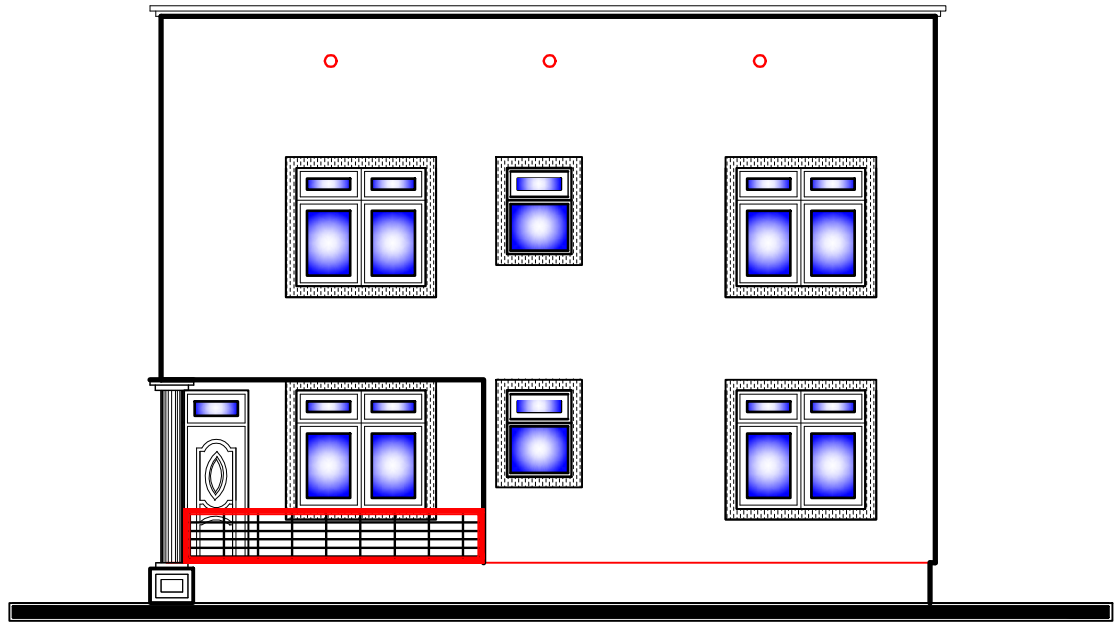

BACK ELEVATION

NOTES

1. Do not scale from drawings. Only figured dimensions to be worked to. When in doubt consult the Architech.
2. All dimensions are in millimitres

ARCHITECTURAL DRAWING

CLIENT :

GA NORTH MUNICIPAL ASSEMBLY

LOCATION :

AFIAMAN

DESCRIPTION

FRONT & BACK VIEW

SCALE 1:100

AD

07

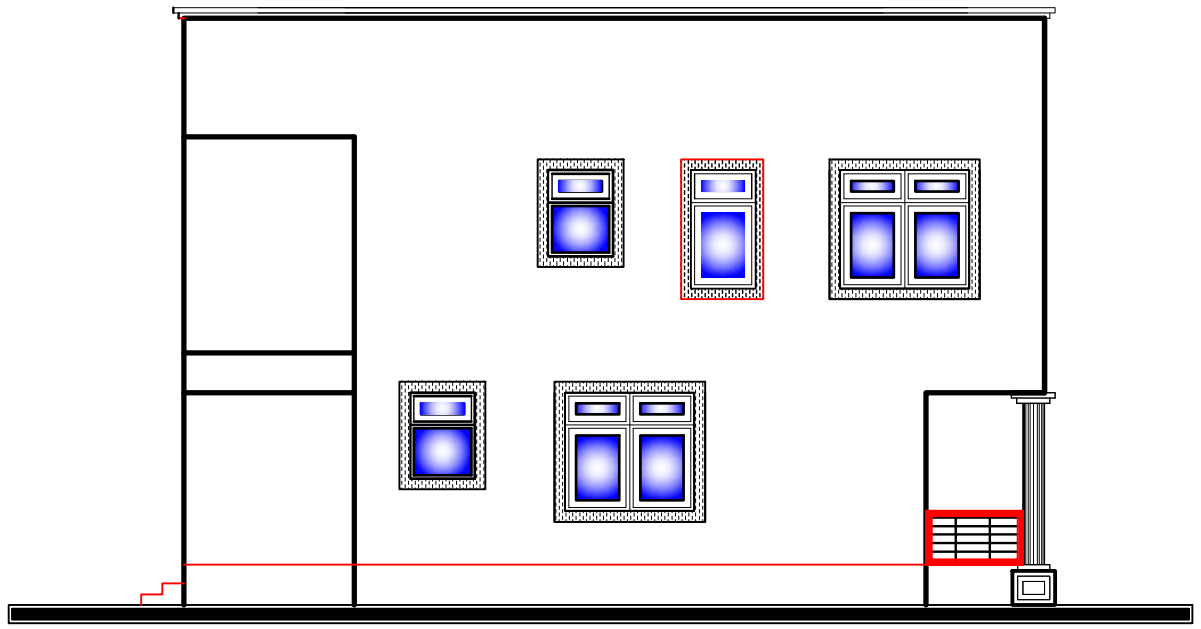

RIGHT SIDE ELEVATION

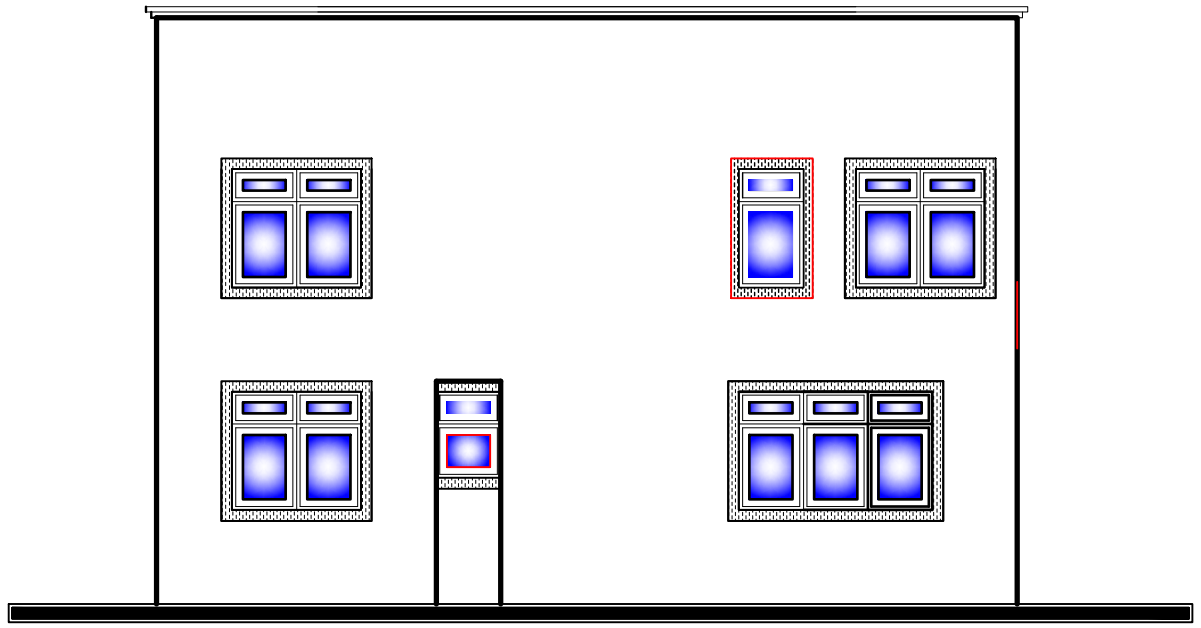

LEFT SIDE ELEVATION

NOTES

1. Do not scale from drawings. Only figured dimensions to be worked to. When in doubt consult the Architech.
2. All dimensions are in millimitres

ARCHITECTURAL DRAWING

CLIENT :

GA NORTH MUNICIPAL ASSEMBLY

LOCATION :

AFIAMAN

DESCRIPTION

LEFT & RIGHT SIDE VIEW

SCALE 1:100

AD

08

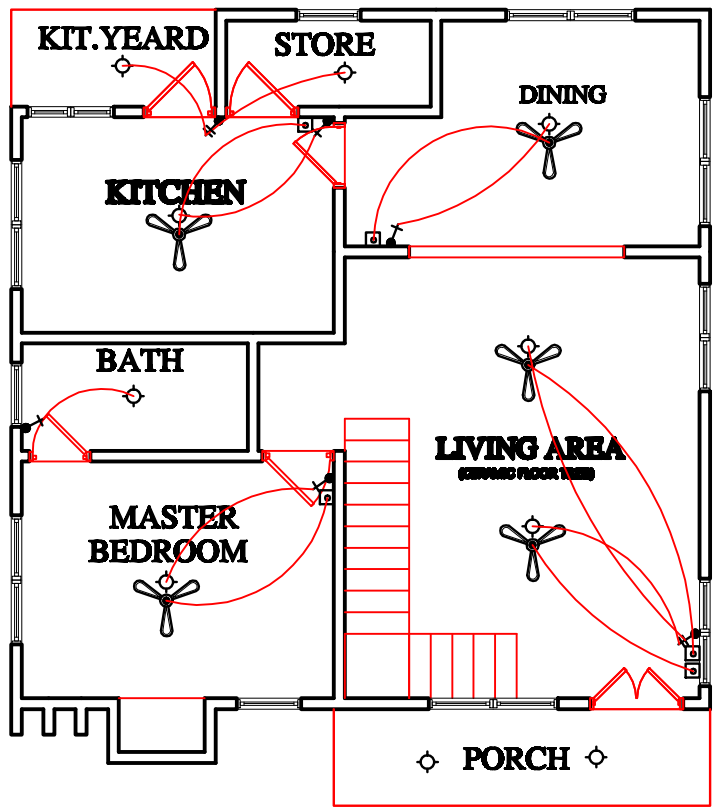

ELECTRICAL LAYOUT FOR GROUND FLOOR PLAN

LEGEND

SYMBOL	DESCRIPTION	MOUNTING HEIGHT
	1 x 40W FLUORECSENT LIGHT FITTING	CEILING MOUNTED
	1 x 40W TABLET TYPE LIGHT FITTING	CEILING MOUNTED
	1 x 40W GLOBE TYPE LIGHT FITTING	CEILING MOUNTED
	1 x 40W BEDHEAD TABLET TYPE LIGHT FITTING	WALL MOUNTED
	1 x 40W BULKHEAD LIGHT FITTING	WALL MOUNTED
	CEILING FAN WITH REGULATOR	CEILING MOUNTED
	13A, DOUBLE SWITCH SOCKET OUTLET	750mm ABOVE FLOOR OR TABLE LEVEL
	13A, SINGLE SWITCH SOCKET OUTLET	750mm ABOVE FLOOR OR TABLE LEVEL
	15A, SWITCH SOCKET OUTLET FOR AIRCONDITION	1350mm ABOVE FLOOR LEVEL
	5A, 1- GANG, 1- WAY LIGHT SWITCH	1350mm ABOVE FLOOR LEVEL
	5A, 2- GANG, 1- WAY LIGHT SWITCH	1350mm ABOVE FLOOR LEVEL
2	5A, 1- GANG, 2- WAY LIGHT SWITCH	1350mm ABOVE FLOOR LEVEL
WH WHS	20A, DP SWITCH SOCKET FOR WATER HEATER	1350mm ABOVE FLOOR LEVEL
	COMBINED MIRROR LIGHT & SHAVER	1800mm ABOVE FLOOR LEVEL
TV	TELEVISION OUTLET	750mm ABOVE FLOOR LEVEL
	TELEPHONE OUTLET	750mm ABOVE FLOOR LEVEL
	DISTRIBUTION BOARD	1800mm ABOVE FLOOR LEVEL
M	3nos. PRE - PAID METER	1800mm ABOVE FLOOR LEVEL

CLIENT :

GA NORTH MUNICIPAL ASSEMBLY

LOCATION :

AFIAMAN

DESCRIPTION

AS SHOWN

SCALE 1:100

AD 09

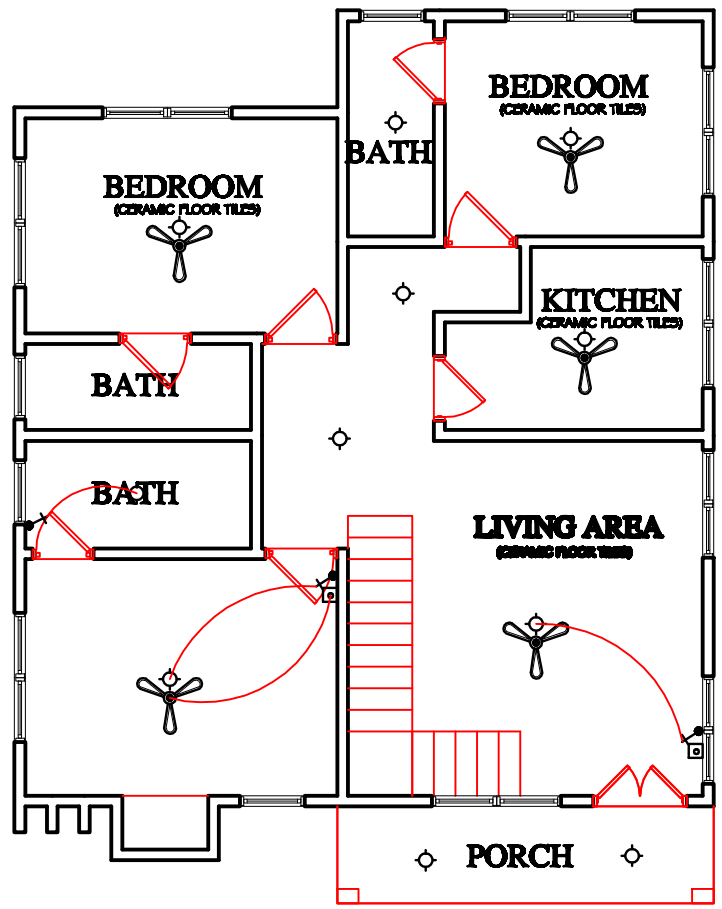

ELECTRICAL LAYOUT FOR FIRST FLOOR PLAN

LEGEND

SYMBOL	DESCRIPTION	MOUNTING HEIGHT
	1 x 40W FLUORECSENT LIGHT FITTING	CEILING MOUNTED
	1 x 40W TABLET TYPE LIGHT FITTING	CEILING MOUNTED
	1 x 40W GLOBE TYPE LIGHT FITTING	CEILING MOUNTED
	1 x 40W BEDHEAD TABLET TYPE LIGHT FITTING	WALL MOUNTED
	1 x 40W BULKHEAD LIGHT FITTING	WALL MOUNTED
	CEILING FAN WITH REGULATOR	CEILING MOUNTED
	13A, DOUBLE SWITCH SOCKET OUTLET	750mm ABOVE FLOOR OR TABLE LEVEL
	13A, SINGLE SWITCH SOCKET OUTLET	750mm ABOVE FLOOR OR TABLE LEVEL
	15A, SWITCH SOCKET OUTLET FOR AIRCONDITION	1350mm ABOVE FLOOR LEVEL
	5A, 1- GANG, 1- WAY LIGHT SWITCH	1350mm ABOVE FLOOR LEVEL
	5A, 2- GANG, 1- WAY LIGHT SWITCH	1350mm ABOVE FLOOR LEVEL
2	5A, 1- GANG, 2- WAY LIGHT SWITCH	1350mm ABOVE FLOOR LEVEL
WH WHS	20A, DP SWITCH SOCKET FOR WATER HEATER	1350mm ABOVE FLOOR LEVEL
	COMBINED MIRROR LIGHT & SHAVER	1800mm ABOVE FLOOR LEVEL
TV	TELEVISION OUTLET	750mm ABOVE FLOOR LEVEL
	TELEPHONE OUTLET	750mm ABOVE FLOOR LEVEL
	DISTRIBUTION BOARD	1800mm ABOVE FLOOR LEVEL
M	3nos. PRE - PAID METER	1800mm ABOVE FLOOR LEVEL

CLIENT :

GA NORTH MUNICIPAL ASSEMBLY

LOCATION :

AFIAMAN

DESCRIPTION

AS SHOWN

SCALE 1:100

AD

10

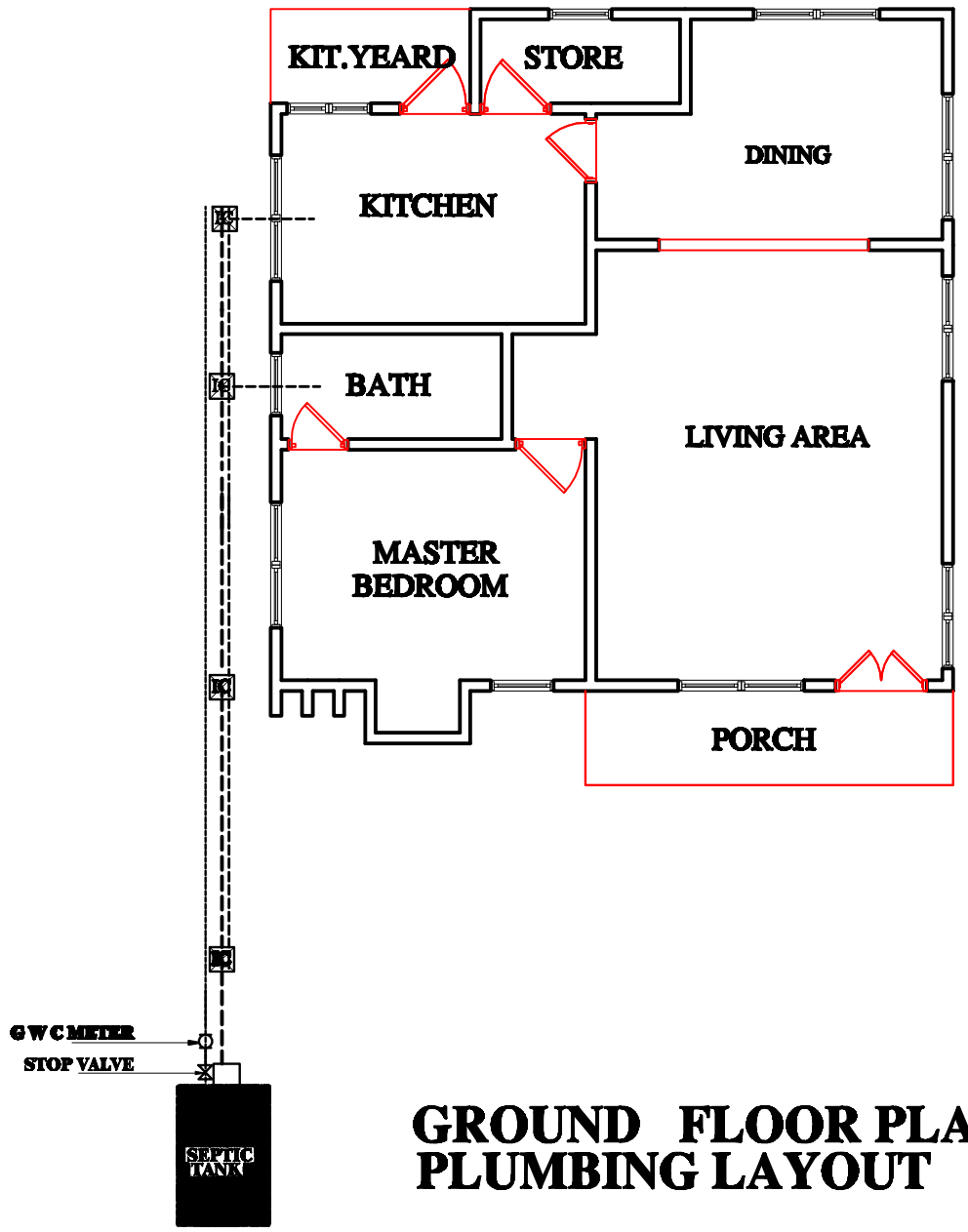

GROUND FLOOR PLAN
PLUMBING LAYOUT

KEY PAN

- 75MM DIA. PVC WASTE WATER PIPE CHANNEL TO SOAK AWAY
- 38MM DIA. PVC WATER PIPE UNDER FLOOR SLAB
- 25MM DIAM. PVC COLD WATER SUPPLY PIPE FROM G. W . C
- FLOOR DRAIN
- KITCHEN SINK
- SHOWER BASIN
- WATER CLOSET (WC)
- WASH HAND BASIN

CLIENT :

GA NORTH MUNICIPAL ASSEMBLY

LOCATION :

AFIAMAN

DESCRIPTION

AS SHOWN

SCALE 1:100

AD

11

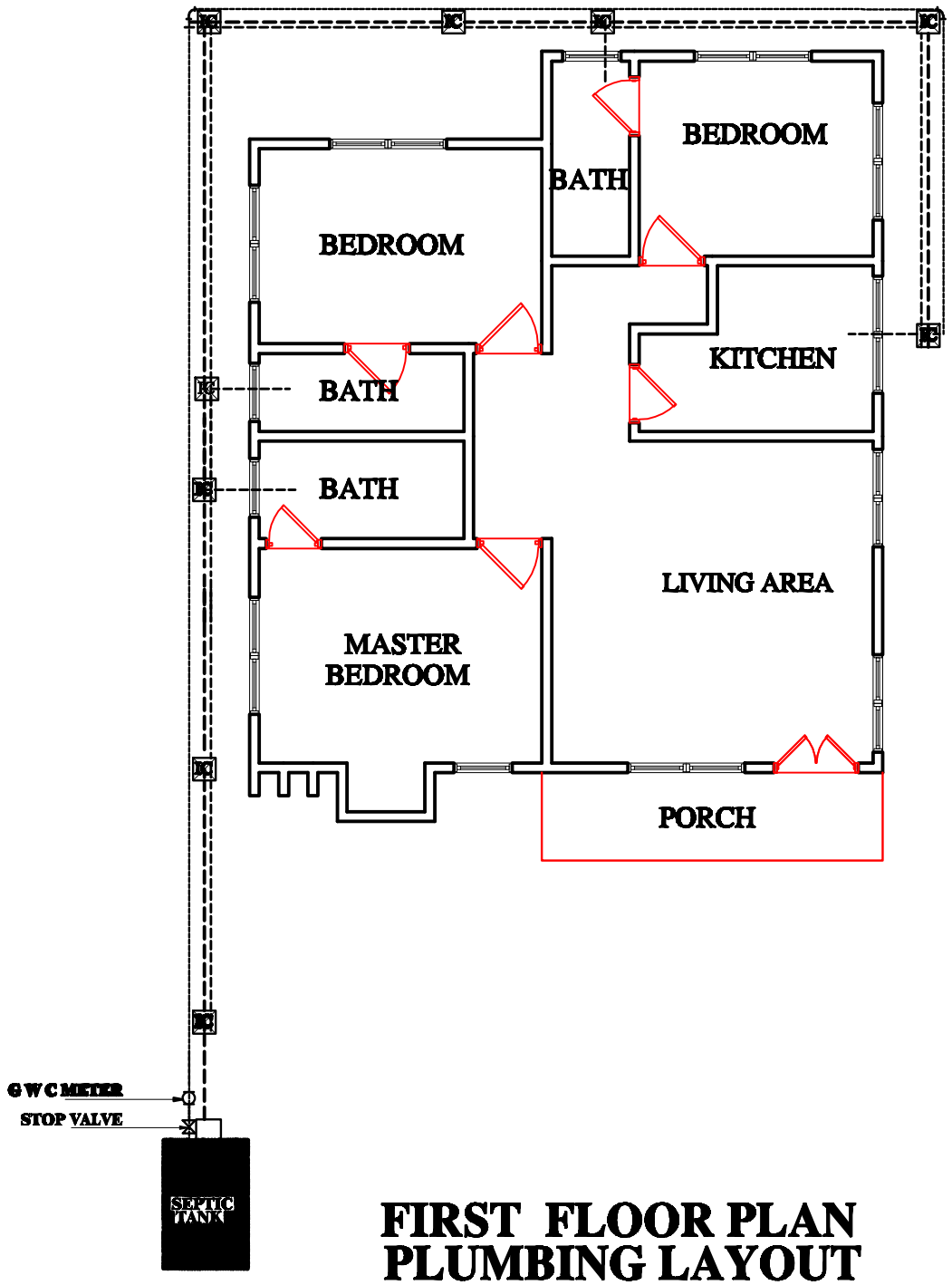

FIRST FLOOR PLAN
PLUMBING LAYOUT

KEY PAN

- 75MM DIA. PVC WASTE WATER PIPE CHANNEL TO SOAK AWAY
- 38MM DIA. PVC WATER PIPE UNDER FLOOR SLAB
- 25MM DIAM. PVC COLD WATER SUPPLY PIPE FROM G. W . C
- FLOOR DRAIN
- KITCHEN SINK
- SHOWER BASIN
- WATER CLOSET (WC)
- WASH HAND BASIN

CLIENT :

GA NORTH MUNICIPAL ASSEMBLY

LOCATION :

AFIAMAN

DESCRIPTION

AS SHOWN

SCALE 1:100

AD

12

REMARKS

1. THIS DRAWING IS TOBE READ IN CONJUNCTION WITH THE SPECIFICATION AND ALL RELEVANT DRAWINGS.
2. ALL DIMENSIONS ARE IN MILIMETRES AND DO NOT SCALE FROM DRAWINGS

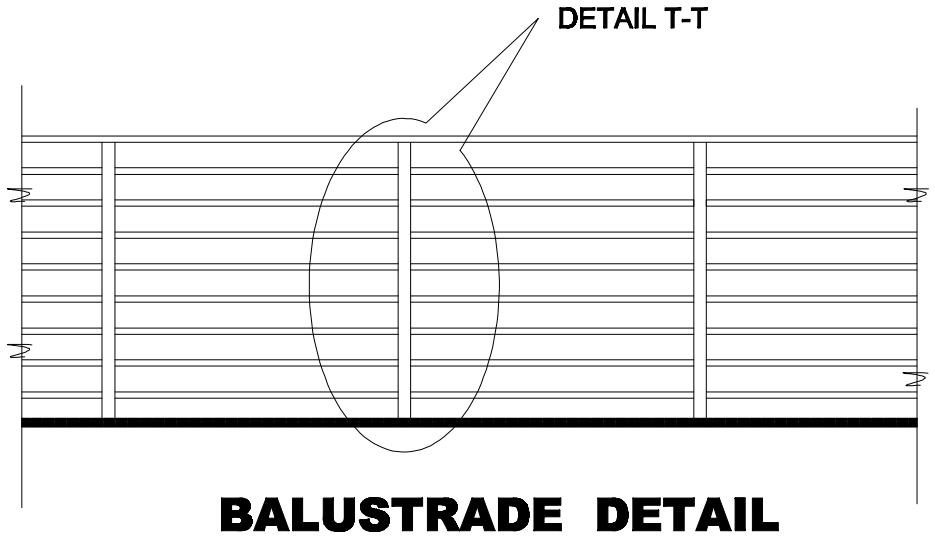

BALUSTRADE DETAIL ELEVATION

SCALE 1: 20

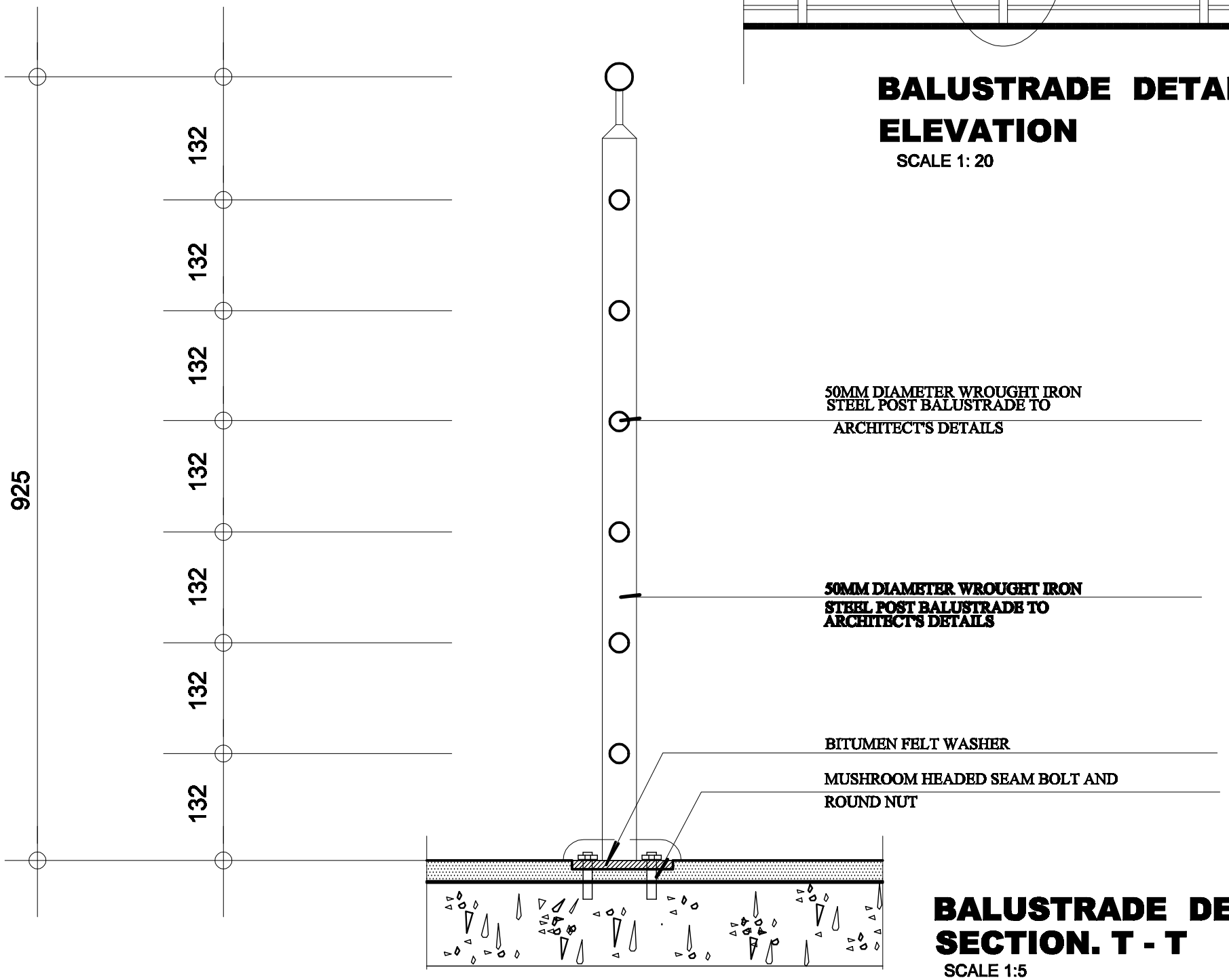

BALUSTRADE DETAIL SECTION. T - T

SCALE 1:5

CLIENT :

GA NORTH MUNICIPAL ASSEMBLY

LOCATION :

AFIAMAN

DESCRIPTION

AS SHOWN

DESIGNED &DRAWN BY:
NANA GYIMAH

SCALE 1:25, 1:10

CONTACT NO

AD | 13

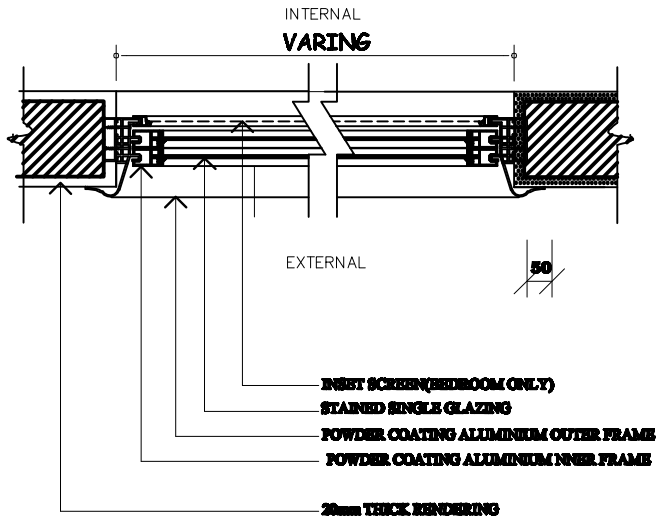

HORIZONTAL SECTION

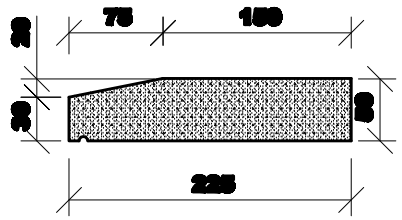

SILL DETAIL FOR ENTRANCE DOOR

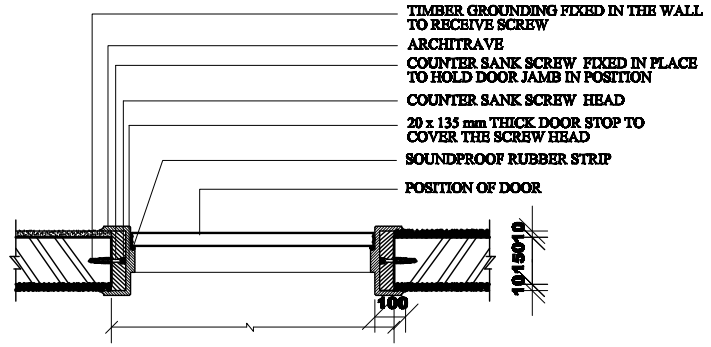

SECTION B-B

REMARKS

1. THIS DRAWING IS TOBE READ IN CONJUNCTION WITH THE SPECIFICATION AND ALL RELEVANT DRAWINGS.
2. ALL DIMENSIONS ARE IN MILIMETRES AND DO NOT SCALE FROM DRAWINGS

VERTICAL SECTION

WINDOW DETAILS

DETAIL A-A

DOOR DETAILS

ELEVATION

CLIENT :

GA NORTH MUNICIPAL ASSEMBLY

LOCATION :

AFIAMAN

DESCRIPTION

AS SHOWN

DESIGNED &DRAWN BY:
NANA GYIMAH

SCALE 1:25, 1:10

CONTACT NO

AD | 14

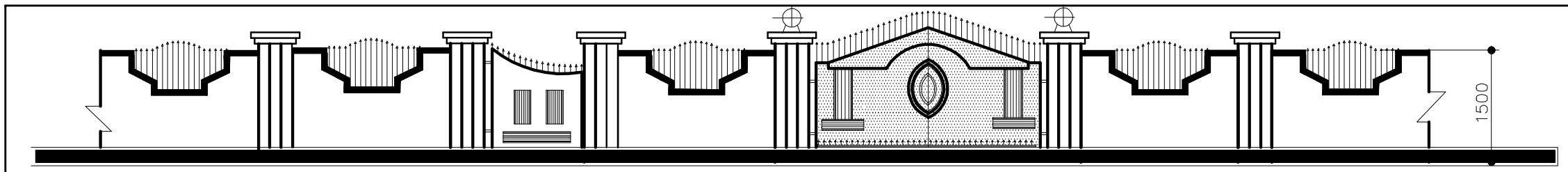

ROAD SIDE ELEVATION

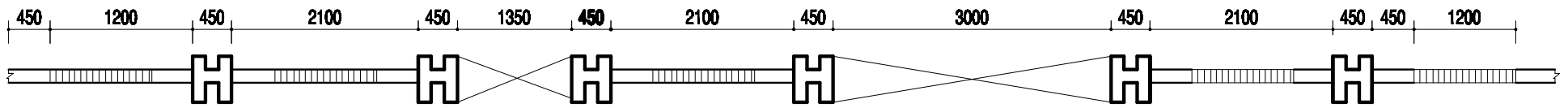

FENCE WALL PLAN

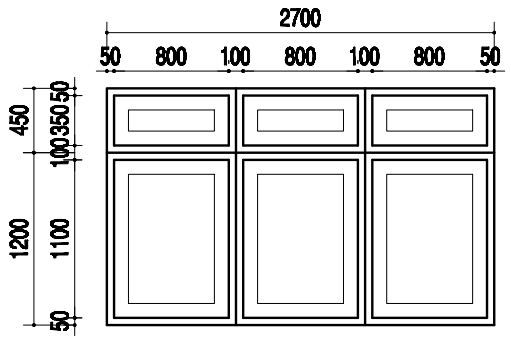

W1 QTY=3
SCALE 1:50

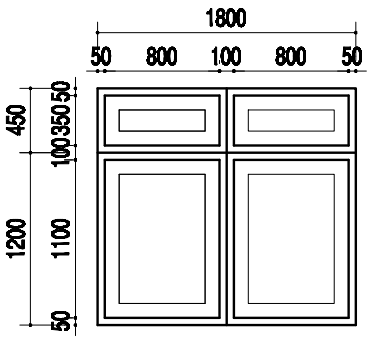

W2 QTY=7
SCALE 1:50

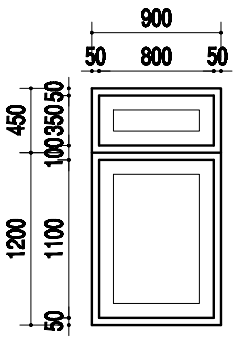

W3 QTY=3
SCALE 1:50

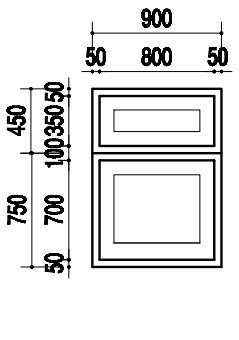

W4 QTY=4
SCALE 1:50

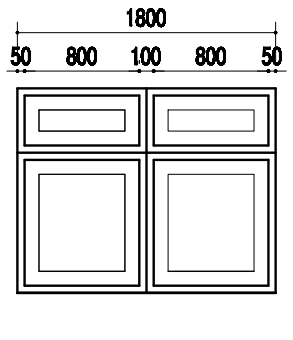

W5 QTY=1
SCALE 1:50

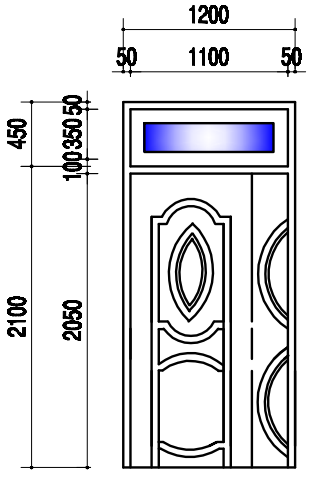

DD1 QTY=1
SCALE 1:50

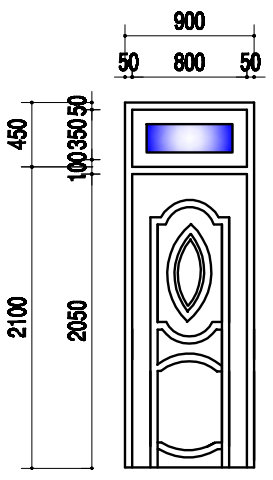

D1 QTY=9
SCALE 1:50

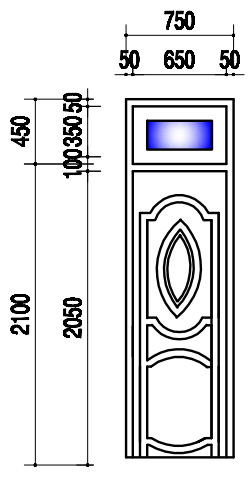

D2 QTY=5
SCALE 1:50

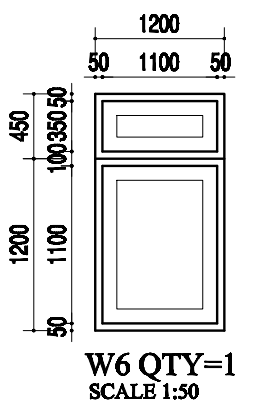

W6 QTY=1
SCALE 1:50

WINDOWS & DOORS SCHEDULES

SCALE 1/50

NOTES

1. Do not scale from drawings. Only figured dimensions to be worked to. When in doubt consult the Architech.
2. All dimensions are in millimitres

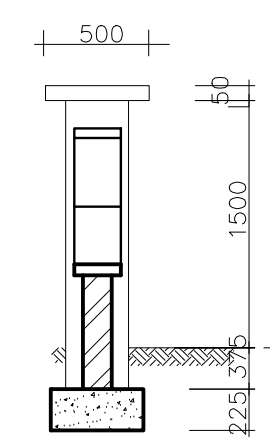

front height

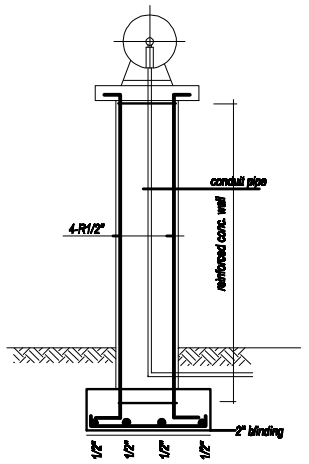

r c column

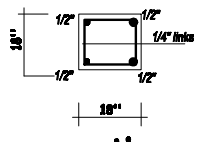

section

ARCHITECTURAL DRAWING

GA NORTH MUNICIPAL ASSEMBLY

LOCATION :

AFIAMAN

DESCRIPTION

AS SHOWN

SCALE 1:100

AD

15

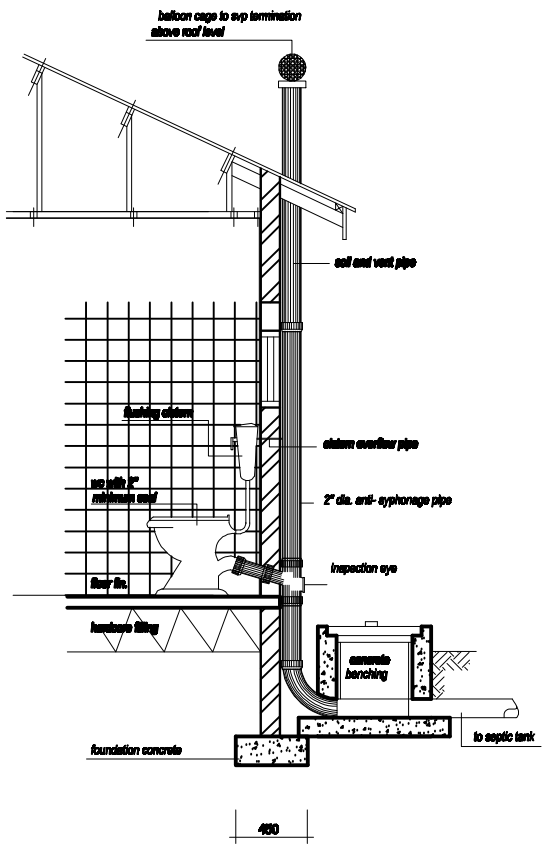

perforated pipes should be removed every 3 months and perforation of slots cleaned with wire brush top over of filter median should be examined and necessary turned over and cleaned every 2 months. it may be necessary on account of clogging to remove part of median and renew. s.t. should be opened every six months and depth ot top crust scertaine if this exceeds 12 plus should be removed.

Air should be excluded from s.t.l. to encourage the growth of amaaic bacteria drains should be given sufficient falls and joints should be properly made to prevent blocking of the apperture and expedite the escape of accumulated gasses. protected against nestling of birds as in drawing.

drains should be given sufficient falls and joints should be properly made to prevent septic tanks must be construced in concrete and not sandcrete blocks top of septic tank to be not less than 6'' above finished ground level where two or more water closets connected to the same soil pipe the trap on each water closet other than the highest shall be ventilated to be an antisyphon pipe to the open air at a point 3'' above the weater seal in the highest water antisyphon pipe and connections should be at 2'' intervals and shall be connected with the arm of soil sipe at a point not less than 6'' and not more than 12'' from the highest point of the water seal which is nearest to the soil pipe

mortar mix for joint 12' 2" grips

should be made under joint.

allow shanks of drains to rest on rammed

earth base (drain gradient 21-40)

NOTES

1. Do not scale from drawings. Only figured dimensions to be worked to. When in doubt consult the Architech.
2. All dimensions are in millmitres

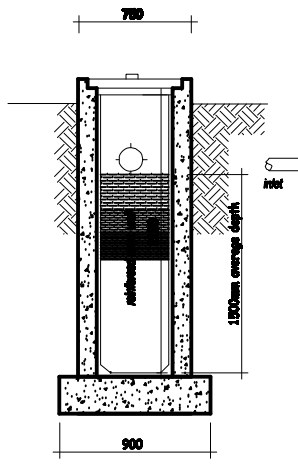

cross section

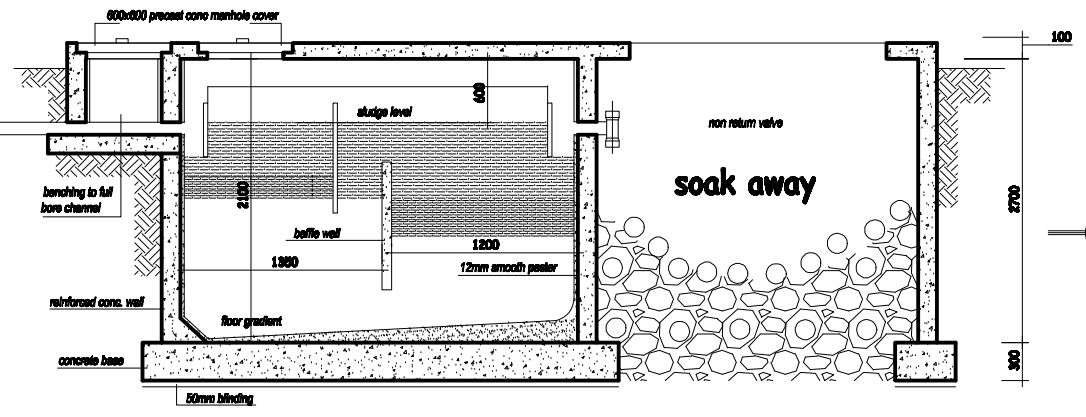

longitudinal section

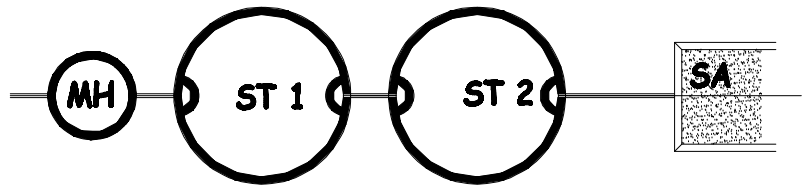

ground plan

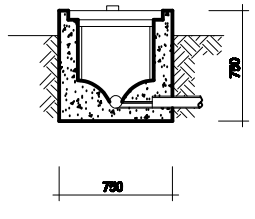

section

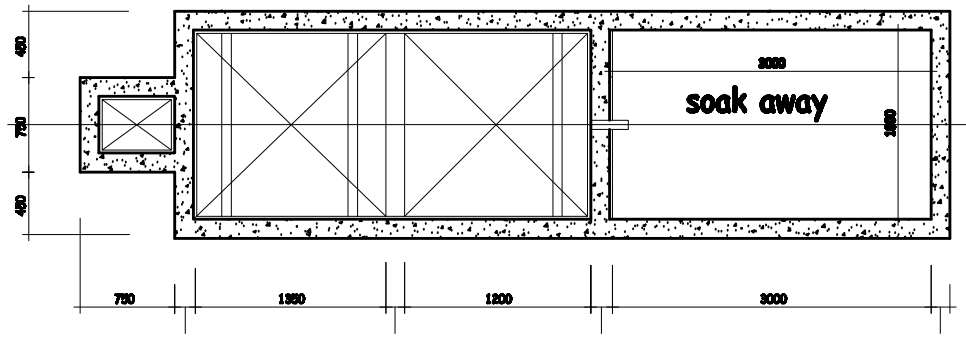

plan

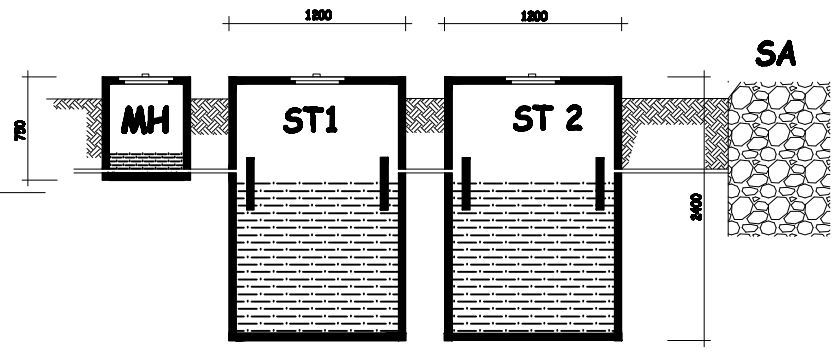

precast system

SEPTICK TANK PLAN

ARCHITECTURAL DRAWING

GA NORTH MUNICIPAL ASSEMBLY

LOCATION :

AFIAMAN

DESCRIPTION

SEPTICK TANK PLAN

SCALE 1:100

AD 16

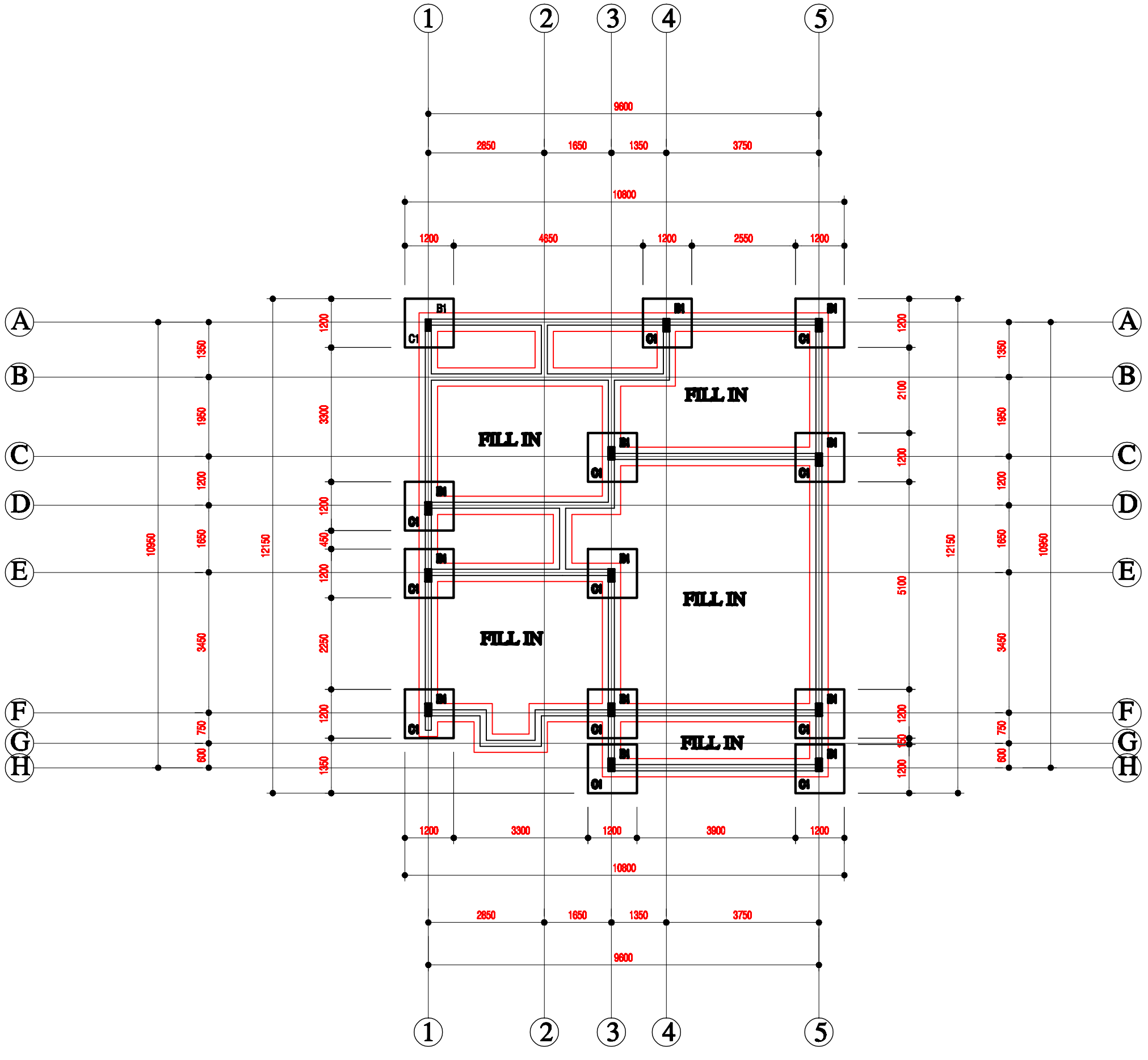

FOUNDATION PLAN

NOTES

1. GRADE 50 WITH CRUSHING STRENGTH OF 25/MM2 AT 28 DAYS.
2. 50 BLINDING TO BE UNDER ALL COLUMNS FOOTING.
3. CONCRETE COVERS AS FOLLOWS =

a. FOOTING 50mm

b. COLUMNS 25mm

c. STAIRCASE..... 25mm

d. BEAMS 25mm

e. SLAB 25mm

STRUCTURAL DRAWING

CLIENT :

GA NORTH MUNICIPAL ASSEMBLY

LOCATION :

AFIAMAN

DESCRIPTION

R.C SLAB DETAILS

SCALE 1:100

ST | 01

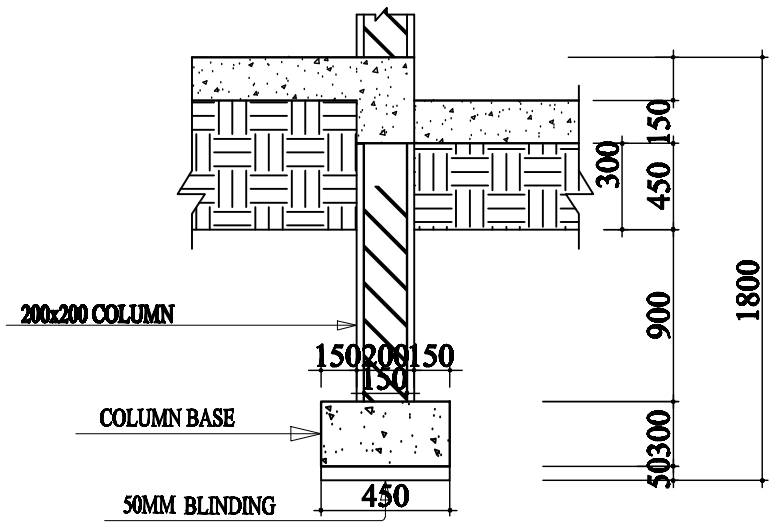

SECTION 01-01

SCALE 1:25

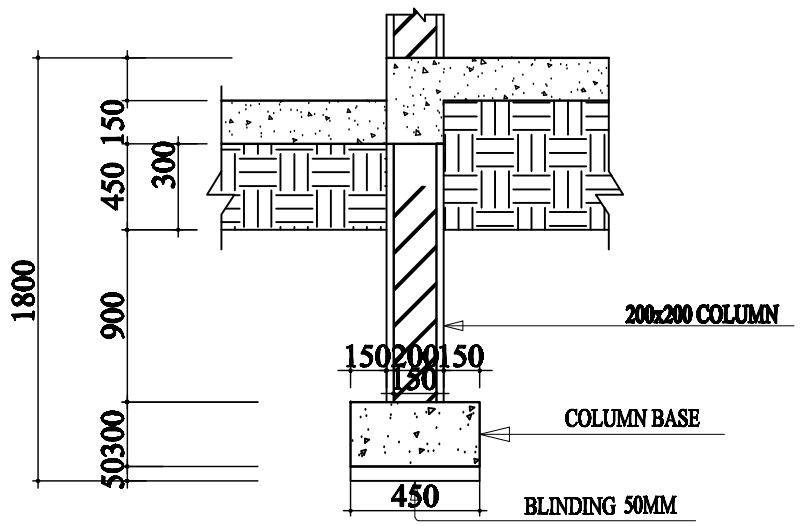

SECTION 02-02

SCALE 1:25

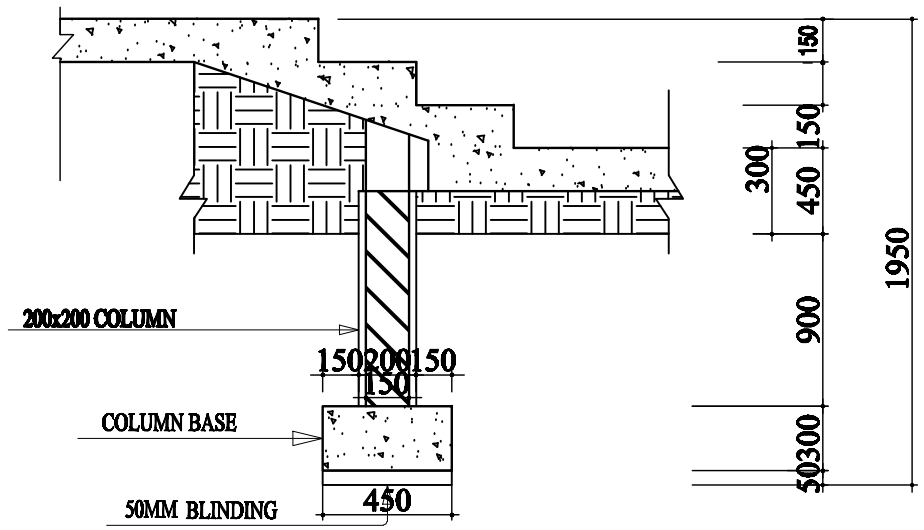

SECTION 03-03

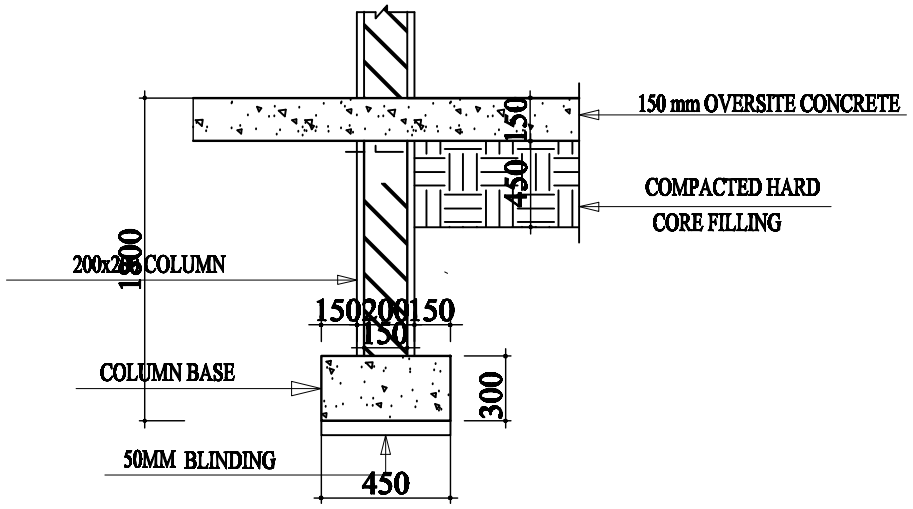

SECTION 04-04

SCALE 1:25

FOOTHING DETAILS

NOTES

1. GRADE 50 WITH CRUSHING STRENGTH OF 25/MM2 AT 28 DAYS.
2. 50 BLINDING TO BE UNDER ALL COLUMNS FOOTING.
3. CONCRETE COVERS AS FOLLOWS =

a. FOOTING 50mm

b. COLUMNS 25mm

c. STAIRCASE..... 25mm

d. BEAMS 25mm

e. SLAB 25mm

STRUCTURAL DRAWING

CLIENT :

GA NORTH MUNICIPAL ASSEMBLY

LOCATION :

AFIAMAN

DESCRIPTION

FOOTHING DETAILS

DESIGNED & DRAWN BY:

MR. BOAKYE YIADOM

CONTACT NO

0242713529

DATE

SCALE 1:25

ST

02

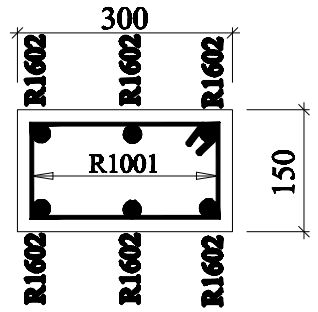

SECT. 01 - 01
SCALE 1:10

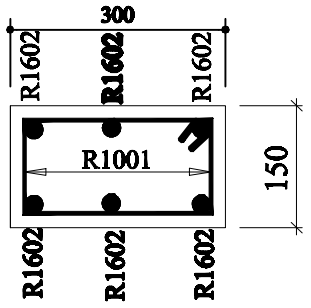

SECT. 1 - 1
SCALE 1:10

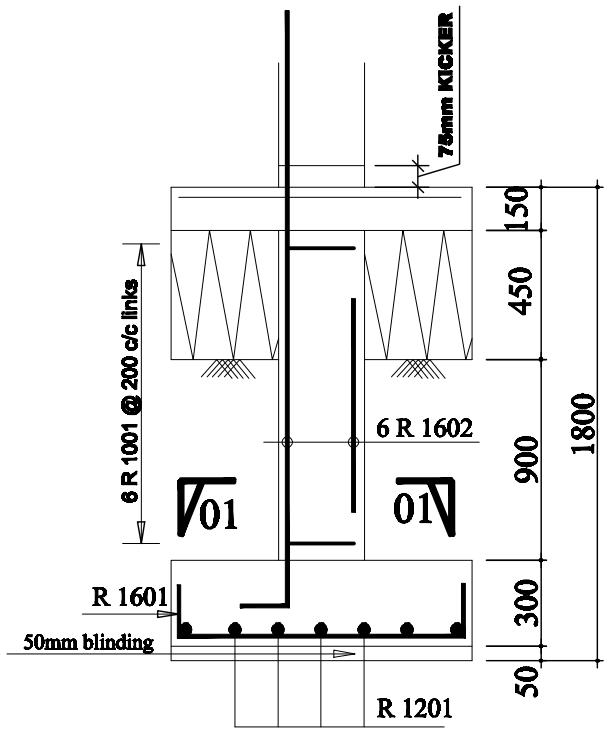

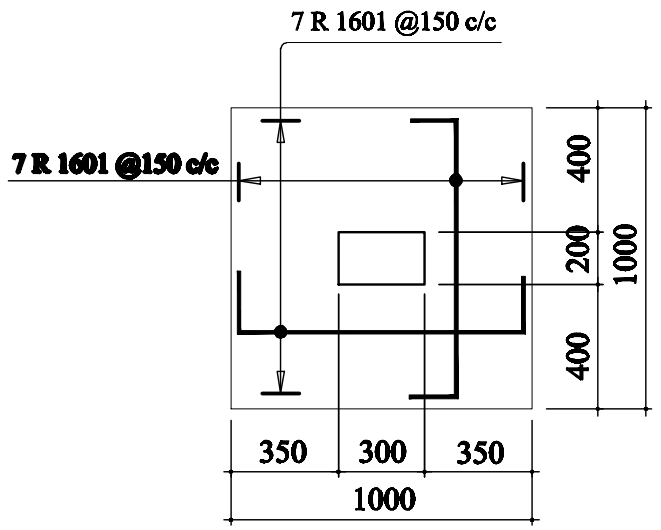

COL .BAES 1 (18 nos)
SCALE 1: 25

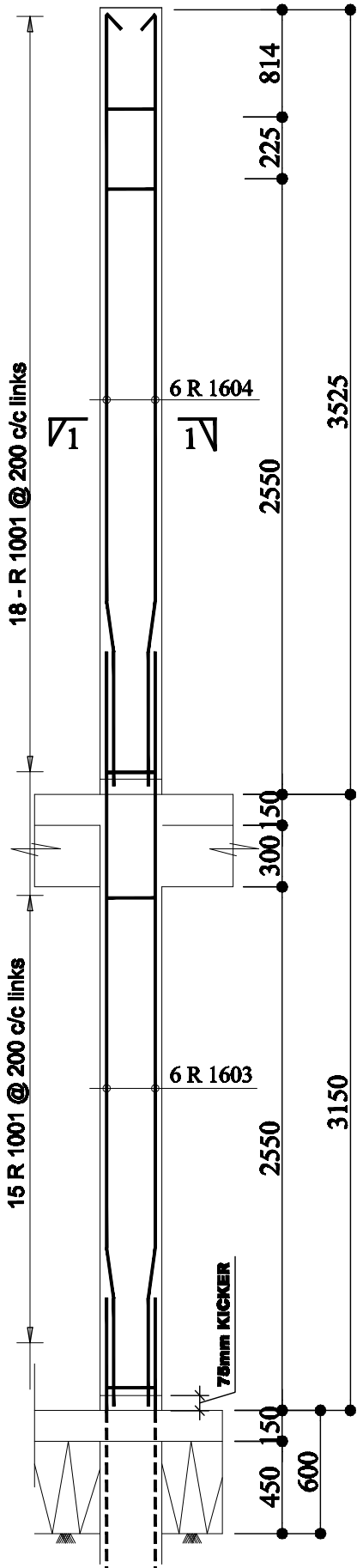

COL .1 (18 nos)
SCALE 1: 30

COLUMN BASE DETAILS

BENDING SCHEDULE COLUMN

BAR MARK	DIA.	QTR.	LENGTH	SHAPE
R1001	R901mm	1026	600	100 757 250
R1601	R16mm	302	1150	100 950
R1602	R16mm	168	2250	150 2100
R1603	R16mm	3450	3450	3000 450
R1604	R16mm	168	2250	1650 450 150

STRUCTURAL DRAWING

GA NORTH MUNICIPAL ASSEMBLY

LOCATION :

AFIAMAN

DESCRIPTION

COLUMN BASE DETAILS

DESIGNED & DRAWN BY: MR. BOAKYE YIADOM

DATE

SCALE 1: 30

CONTACT NO 0242713529

ST 03

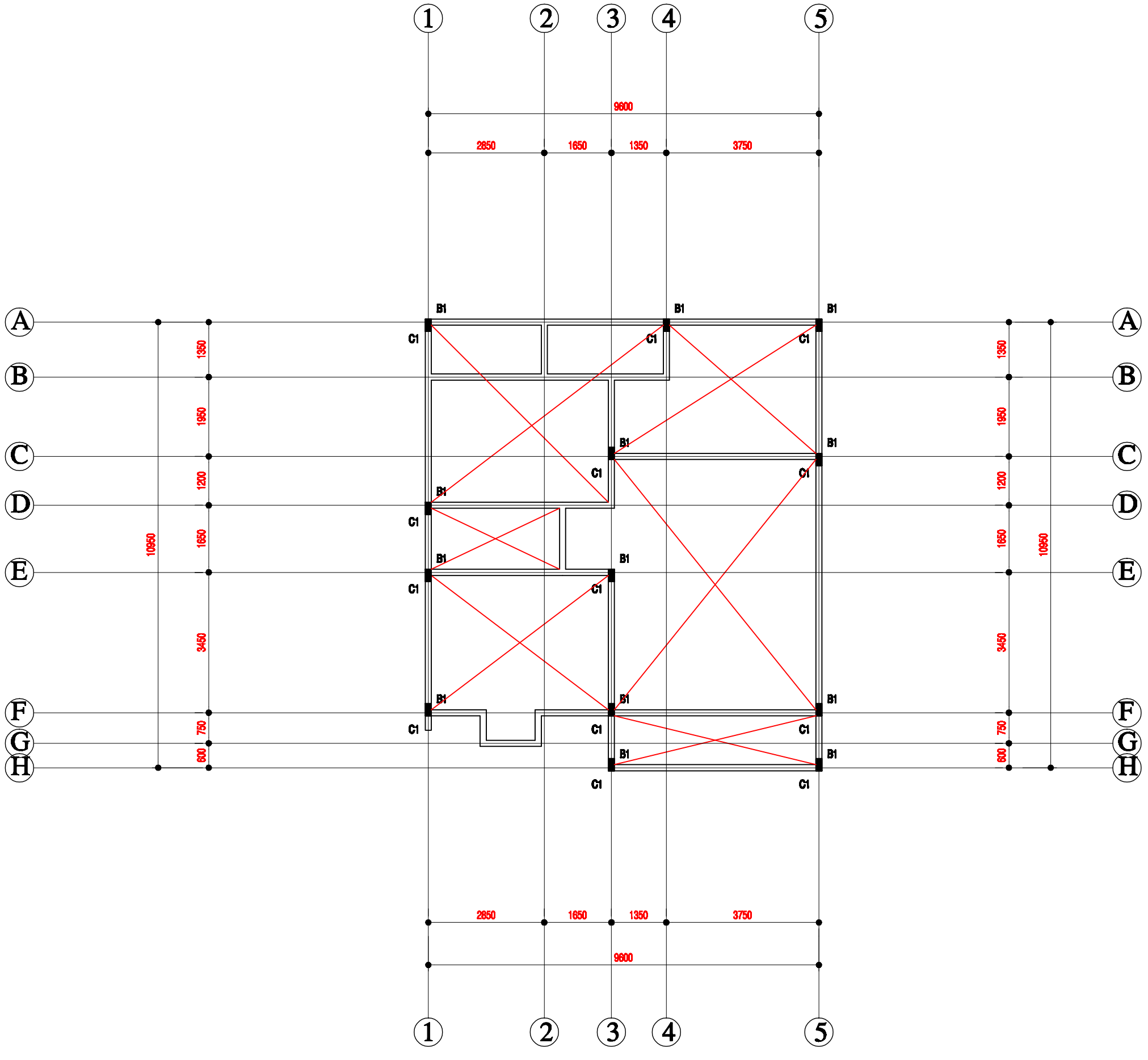

RC. COLUMN ARRANGMENT

NOTES

1. GRADE 50 WITH CRUSHING STRENGTH OF 25/MM2 AT 28 DAYS.
2. 50 BLINDING TO BE UNDER ALL COLUMNS FOOTING.
3. CONCRETE COVERS AS FOLLOWS =

a. FOOTING 50mm

b. COLUMNS 25mm

c. STAIRCASE..... 25mm

d. BEAMS 25mm

e. SLAB 25mm

STRUCTURAL DRAWING

CLIENT :

GA NORTH MUNICIPAL ASSEMBLY

LOCATION :

AFIAMAN

DESCRIPTION

R.C SLAB DETAILS

SCALE 1:100

ST | 04

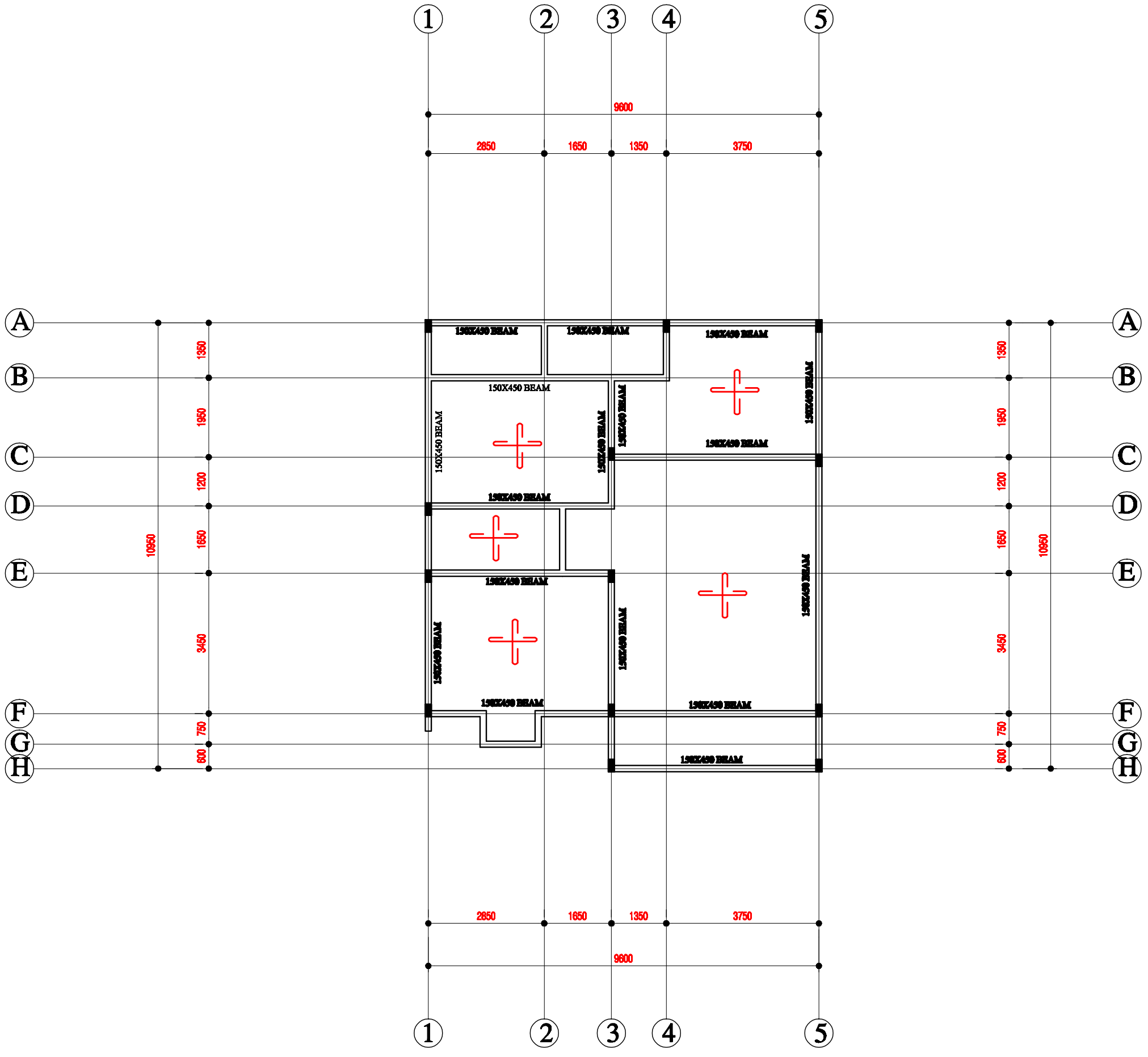

GENERAL ARRANGMENT OF BEAM LAYOUT PLAN

NOTES

1. GRADE 50 WITH CRUSHING STRENGTH OF 25/MM2 AT 28 DAYS.
2. 50 BLINDING TO BE UNDER ALL COLUMNS FOOTING.
3. CONCRETE COVERS AS FOLLOWS =

a. FOOTING 50mm

b. COLUMNS 25mm

c. STAIRCASE..... 25mm

d. BEAMS 25mm

e. SLAB 25mm

STRUCTURAL DRAWING

CLIENT :

GA NORTH MUNICIPAL ASSEMBLY

LOCATION :

AFIAMAN

DESCRIPTION

R.C SLAB DETAILS

SCALE 1:100

ST | 05

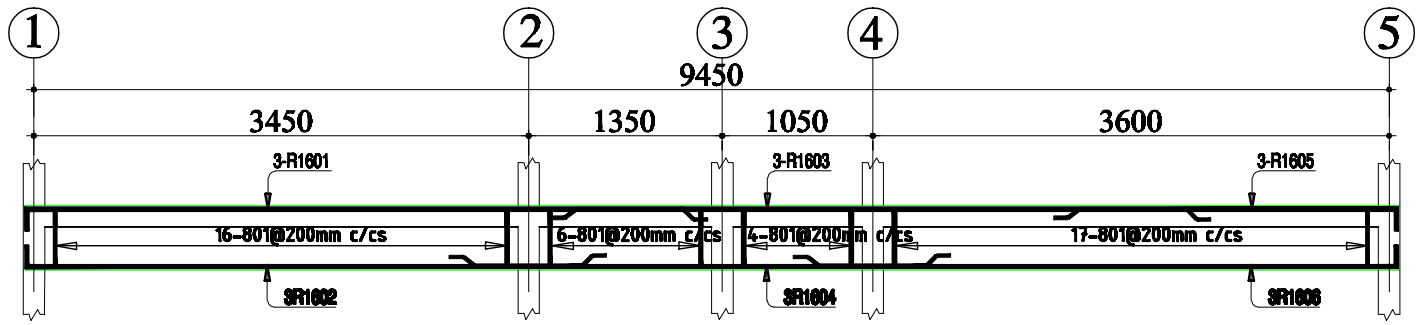

BEAM ON G.LINE A
(QTY - 1)
SCALE 1:50

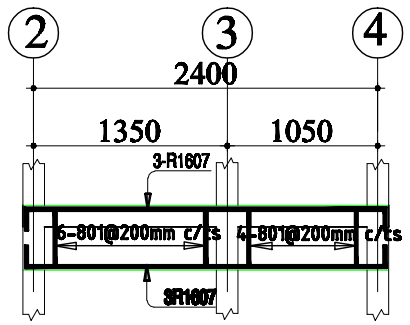

BEAM ON G.LINE B
(QTY - 1)
SCALE 1:50

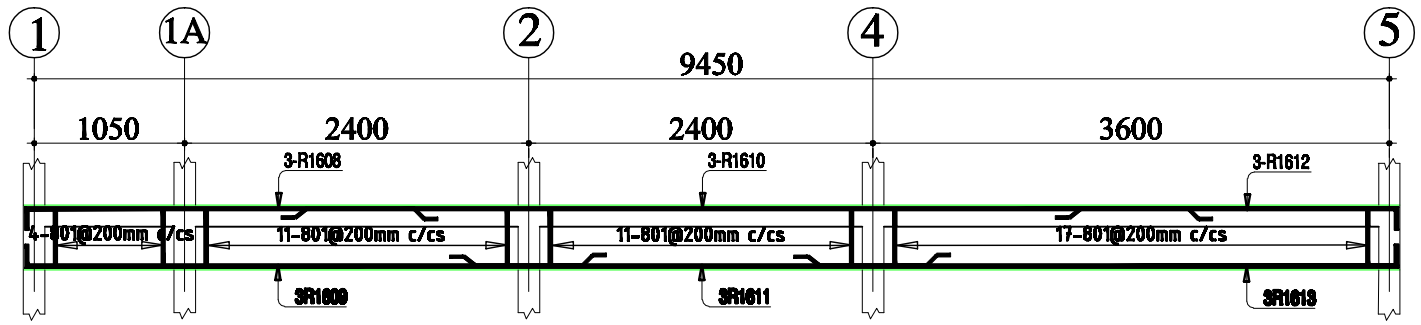

BEAM ON G.LINE C
(QTY - 1)
SCALE 1:50

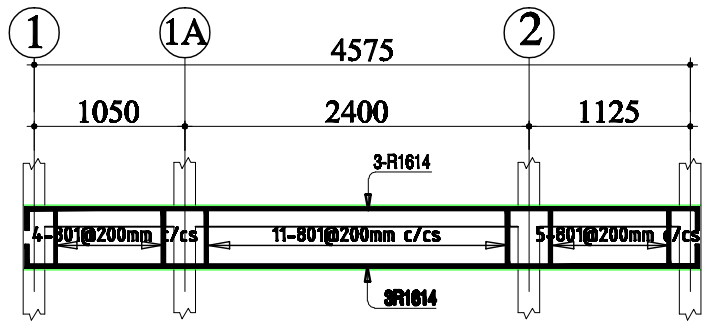

BEAM ON G.LINE D
(QTY - 1)
SCALE 1:50

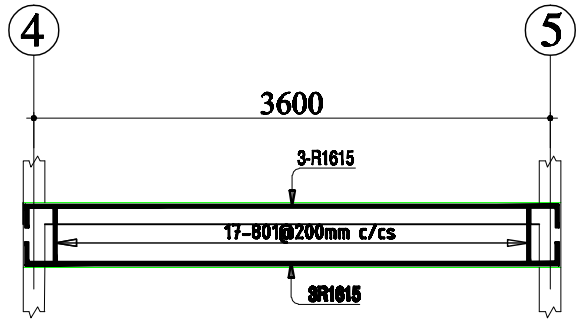

BEAM ON G.LINE E,G&H
(QTY - 3)
SCALE 1:50

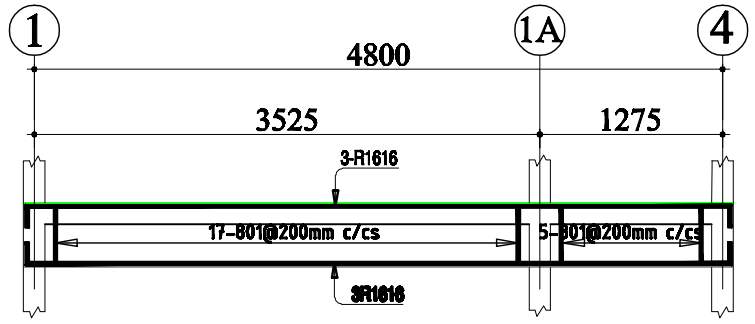

BEAM ON G.LINE F
(QTY - 1)
SCALE 1:50

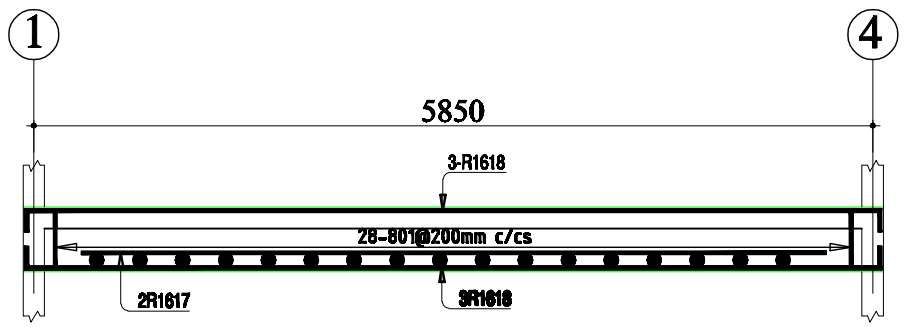

BEAM ON G.LINE I
(QTY - 1)
SCALE 1:50

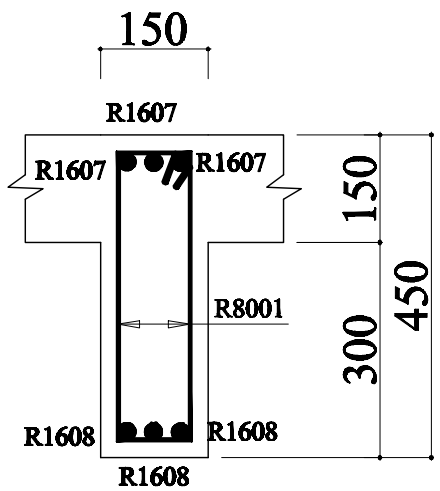

SECT. 1 - 1
SCALE 1:10

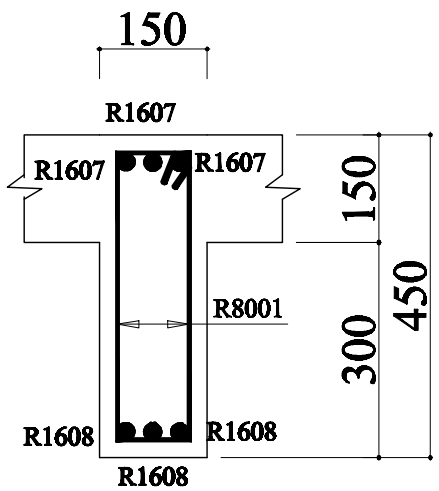

SECT. 1 - 1
SCALE 1:10

RC.DETAIL OF BEAMS
BENDING SCHEDULE

BAR MARK	DIA.	QTY.	LENGTH	SHAPE
R801	R801mm	267	1675	400 / 100
R1601	R16mm	3	4730	4580 / 150
R1602	R16mm	3	4025	150 3875
R1603	R16mm	3	4200	STRAIGHT
R1604	R16mm	3	3150	STRAIGHT
R1605	R16mm	3	2360	2210 / 150
R1606	R16mm	3	4175	4025 / 150
R1607	R16mm	3	2800	150 2500 150
R1608	R16mm	3	2850	150 2700
R1609	R16mm	3	4025	150 3875
R1610	R16mm	3	6150	STRAIGHT
R1611	R16mm	3	3150	STRAIGHT
R1612	R16mm	3	2350	2200 / 150
R1613	R16mm	3	4175	4025 / 150
R1614	R16mm	6	4675	150 4575 150
R1615	R16mm	6	4000	150 3700 150
R1616	R16mm	6	4200	150 4000 150
R1617	R16mm	2	5200	STRAIGHT
R1618	R16mm	6	5250	150 5050 150

STRUCTURAL DRAWING

CLIENT :
GA NORTH MUNICIPAL ASSEMBLY

LOCATION :
AFIAMAN

DESCRIPTION
R.C SLAB DETAILS

SCALE 1:100

ST | 06

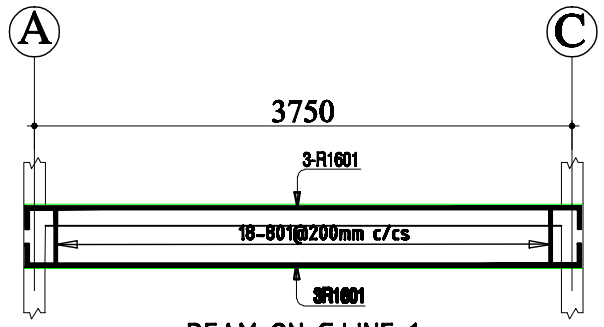

BEAM ON G.LINE 1
(QTY - 1)
SCALE 1:50

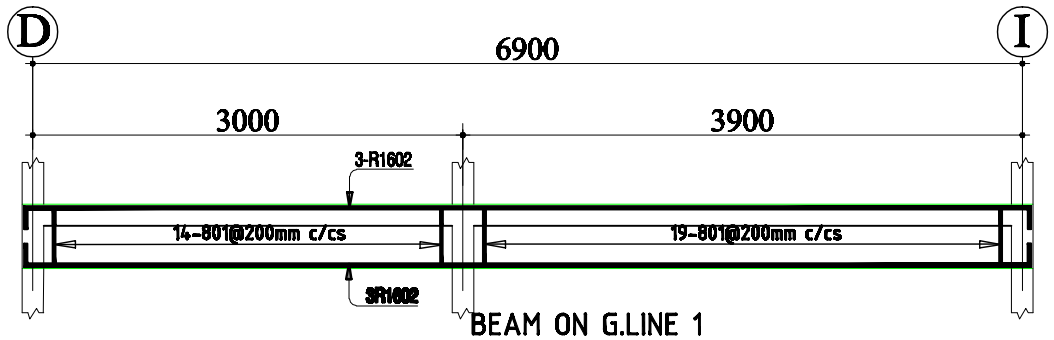

BEAM ON G.LINE 1
(QTY - 1)
SCALE 1:50

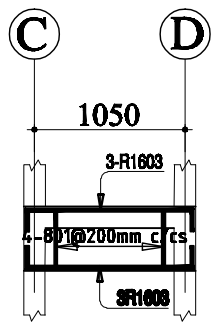

BEAM ON G.LINE 1A
(QTY - 1)
SCALE 1:50

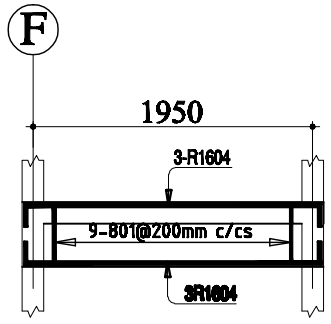

BEAM ON G.LINE 1A
(QTY - 1)
SCALE 1:50

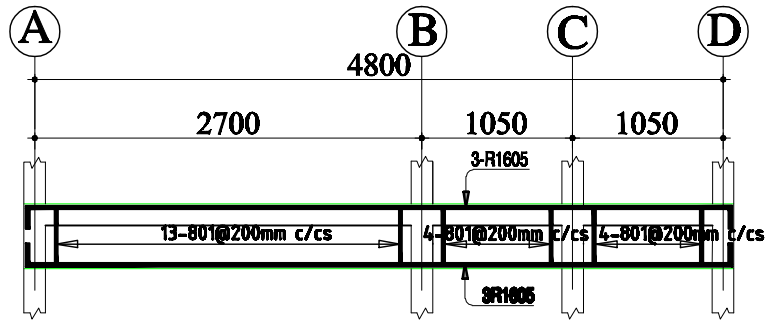

BEAM ON G.LINE 2
(QTY - 1)
SCALE 1:50

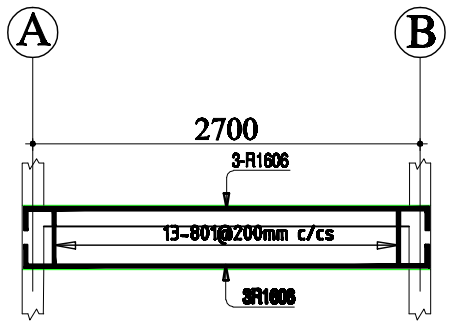

BEAM ON G.LINE 3
(QTY - 1)
SCALE 1:50

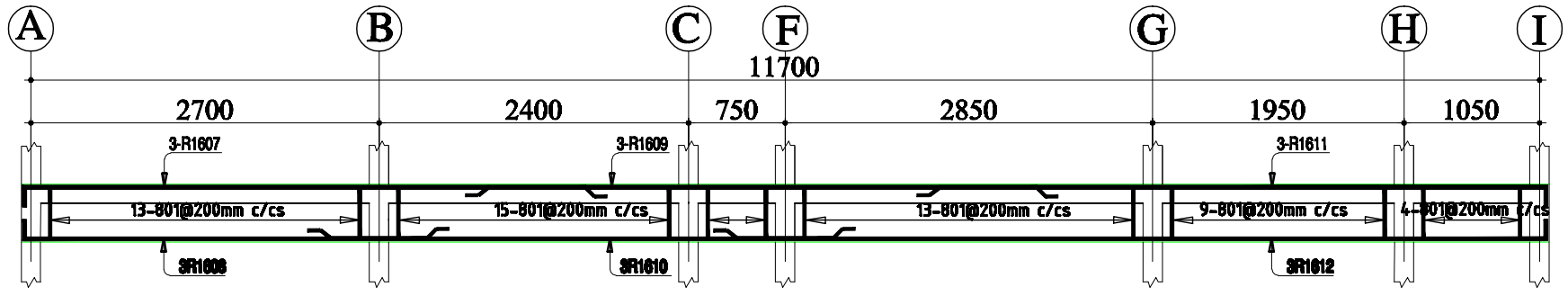

BEAM ON G.LINE 4
(QTY - 1)
SCALE 1:50

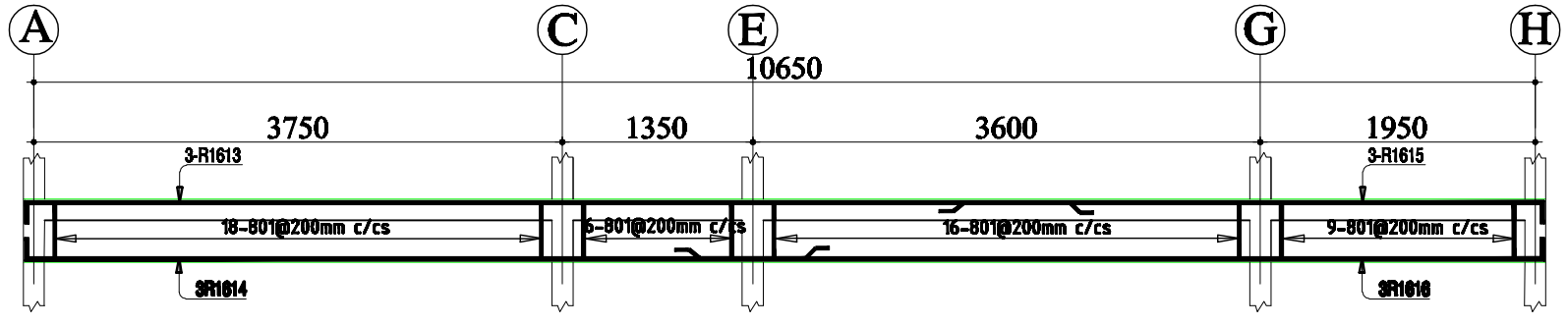

BEAM ON G.LINE 5
(QTY - 1)
SCALE 1:50

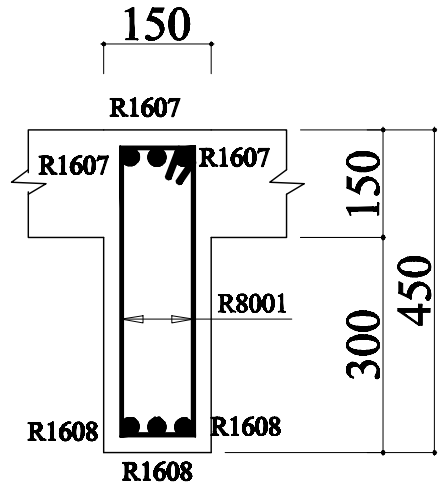

SECT. 1 - 1
SCALE 1:10

RC.DETAIL OF BEAMS
BENDING SCHEDULE

BAR MARK	DIA.	QTY.	LENGTH	SHAPE
R801	R801mm	267	1675	400 / 100
R1601	R16mm	6	4150	150 — 3850 — 150
R1602	R16mm	6	7300	150 — 7000 — 150
R1603	R16mm	6	1450	150 — 1150 — 150
R1604	R16mm	2	2350	150 — 2050 — 150
R1605	R16mm	3	5200	150 — 4900 — 150
R1606	R16mm	3	3100	150 — 2800 — 150
R1607	R16mm	3	4500	150 — 4350
R1608	R16mm	3	3275	150 — 3125
R1609	R16mm	6	4250	STRAIGHT
R1610	R16mm	6	3900	STRAIGHT
R1611	R16mm	2	4850	4700 — 150
R1612	R16mm	6	6425	6275 — 150
R1613	R16mm	6	7550	150 — 7400
R1614	R16mm	2	5675	150 — 5525
R1615	R16mm	6	4250	4100 — 150
R1616	R16mm	6	6125	5975 — 150

STRUCTURAL DRAWING

CLIENT :

GA NORTH MUNICIPAL ASSEMBLY

LOCATION :

AFIAMAN

DESCRIPTION

R.C SLAB DETAILS

SCALE 1:100

ST | 07

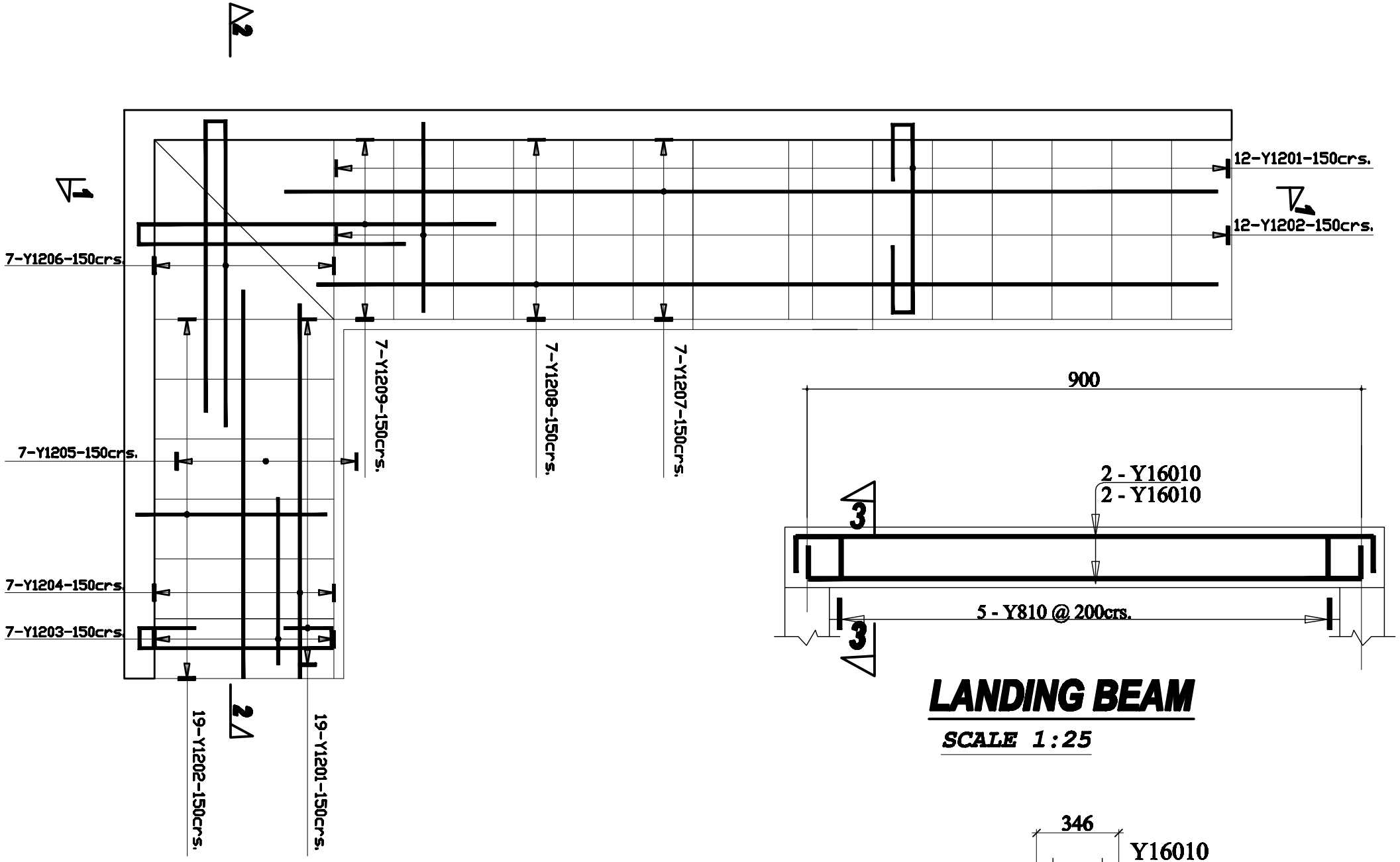

RC.DETAIL OF STAIRCASE

LANDING BEAM

SCALE 1:25

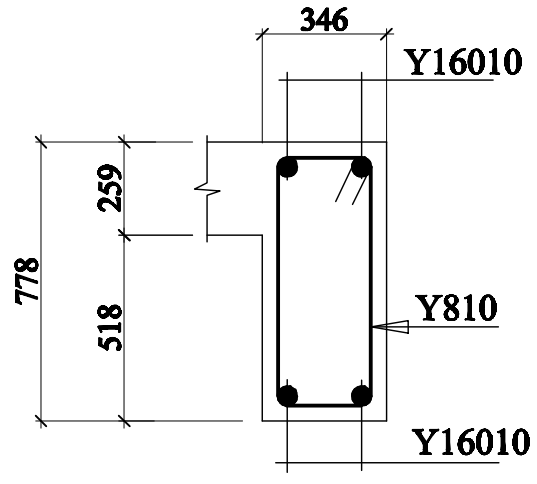

SECT. 3 - 3

SCALE 1:10

RC.DETAIL OF STAIRCASE
BENDING SCHEDULE

BAR MARK	DIA.	QTY.	TOTAL LENGTH	SHAPE
Y1001	Y16mm	31	1650	100 850 100
Y1002	Y16mm	31	850	STRAIGHT
Y1003	Y16mm	7	2150	1000 400 350 400
Y1004	Y16mm	7	2100	STRAIGHT
Y1005	Y16mm	7	2100	STRAIGHT
Y1006	Y16mm	7	3300	850 200 100 7250 850
Y1007	Y16mm	7	1900	STRAIGHT
Y1008	Y16mm	7	1900	STRAIGHT
Y1009	Y16mm	7	3300	100 850 200 850 1250
Y16010	Y16mm	2	1100	200 900 200
Y501	Y8mm	5	1050	100 350 75

STRUCTURAL DRAWING

CLIENT :
GA NORTH MUNICIPAL ASSEMBLY

LOCATION :
AFIAMAN

DESCRIPTION
R.C STAIRCASE DETAILS

SCALE 1:100

ST 08

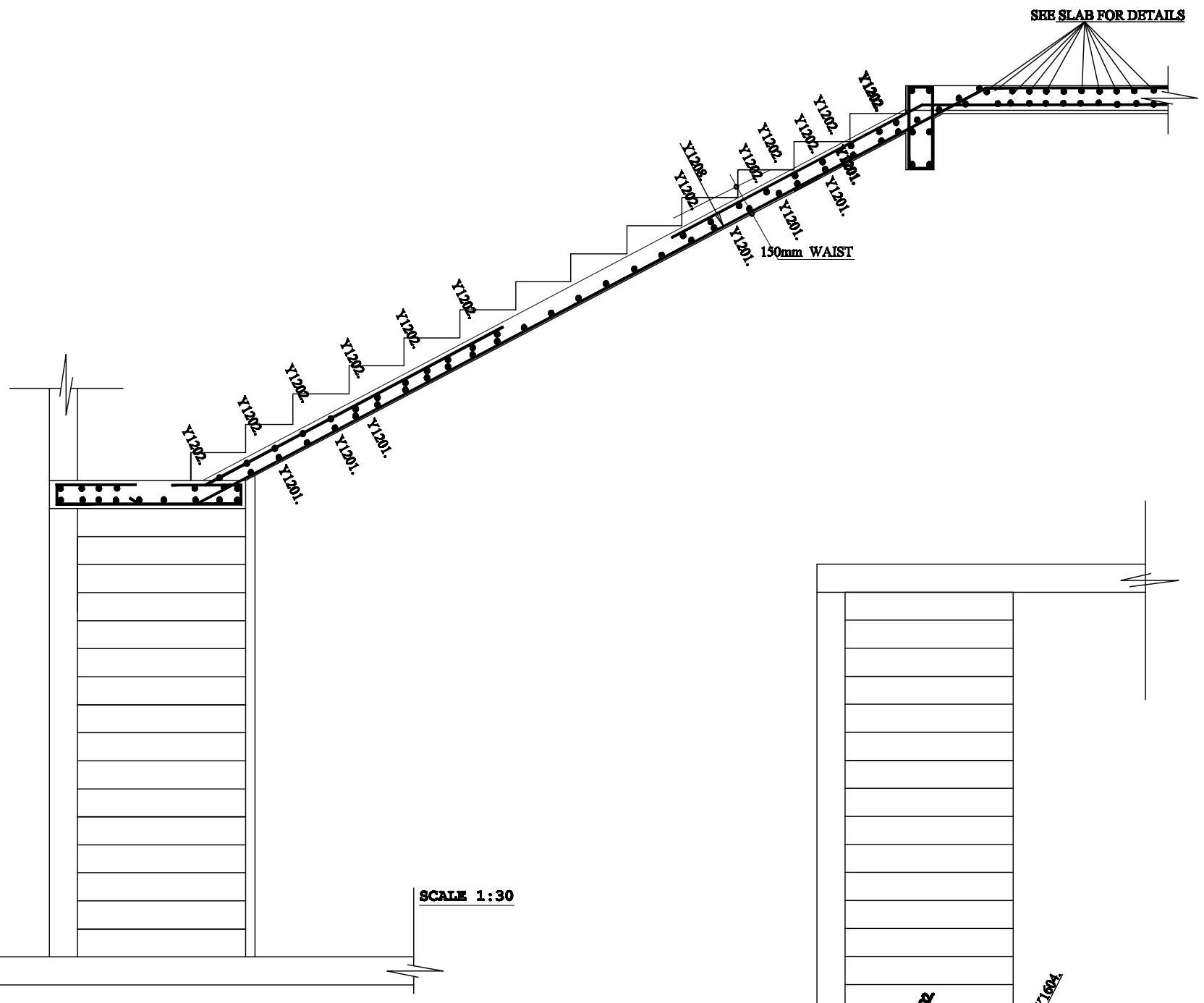

SECTION. 1 - 1

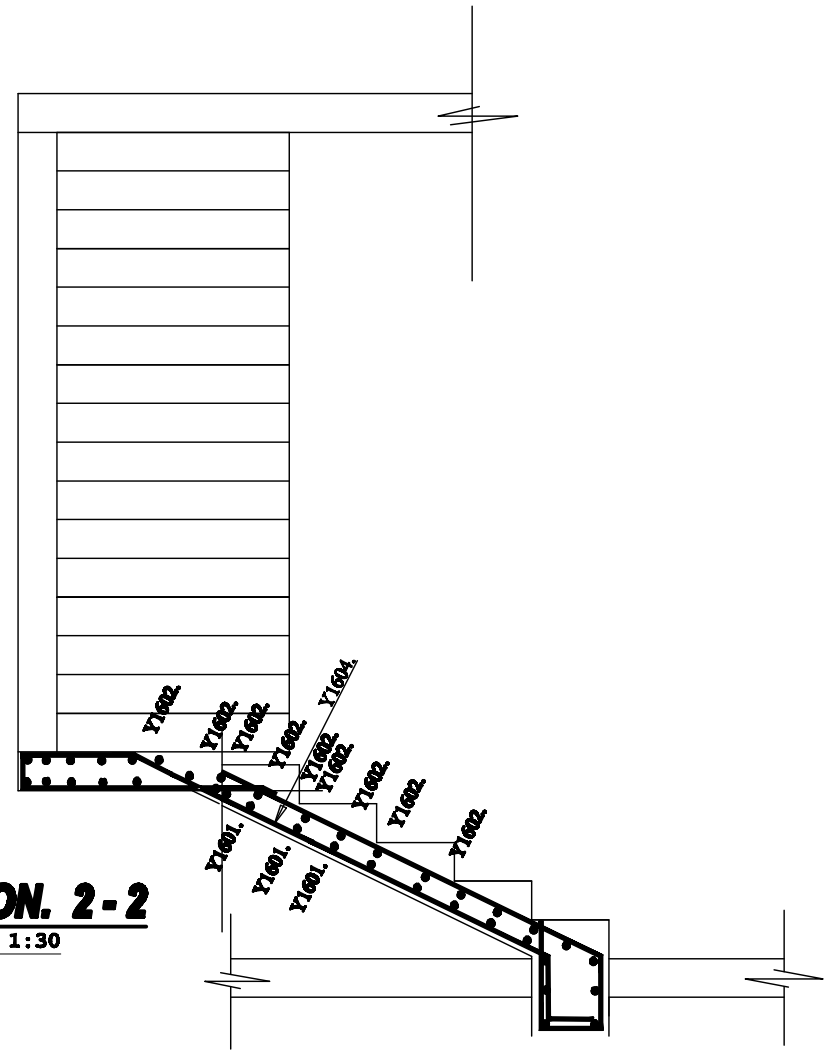

SECTION. 2 - 2

SCALE 1:30

RC.DETAIL OF STAIRCASE

SCALE 1:30

RC.DETAIL OF STAIRCASE BENDING SCHEDULE

BAR MARK	DIA.	QTY.	TOTAL LENGTH	SHAPE
Y1601	Y16mm	31	1650	100 | 850 | 100
Y1602	Y16mm	31	850	STRAIGHT
Y1603	Y16mm	7	2150	1000 / 400 | 350 | 400
Y1604	Y16mm	7	2100	STRAIGHT
Y1605	Y16mm	7	2100	STRAIGHT
Y1606	Y16mm	7	3300	850 / 200 / 1250 / 850 / 100
Y1607	Y16mm	7	1900	STRAIGHT
Y1608	Y16mm	7	1900	STRAIGHT
Y1609	Y16mm	7	3300	100 / 850 / 200 / 850 / 1250
Y16010	Y16mm	2	1100	200 | 900 | 200
YS01	Y8mm	5	1050	100 | 350 | 75

STRUCTURAL DRAWING

CLIENT :

GA NORTH MUNICIPAL ASSEMBLY

LOCATION :

AFIAMAN

DESCRIPTION

R.C STAIRCASE DETAILS

SCALE 1:100

ST | 09

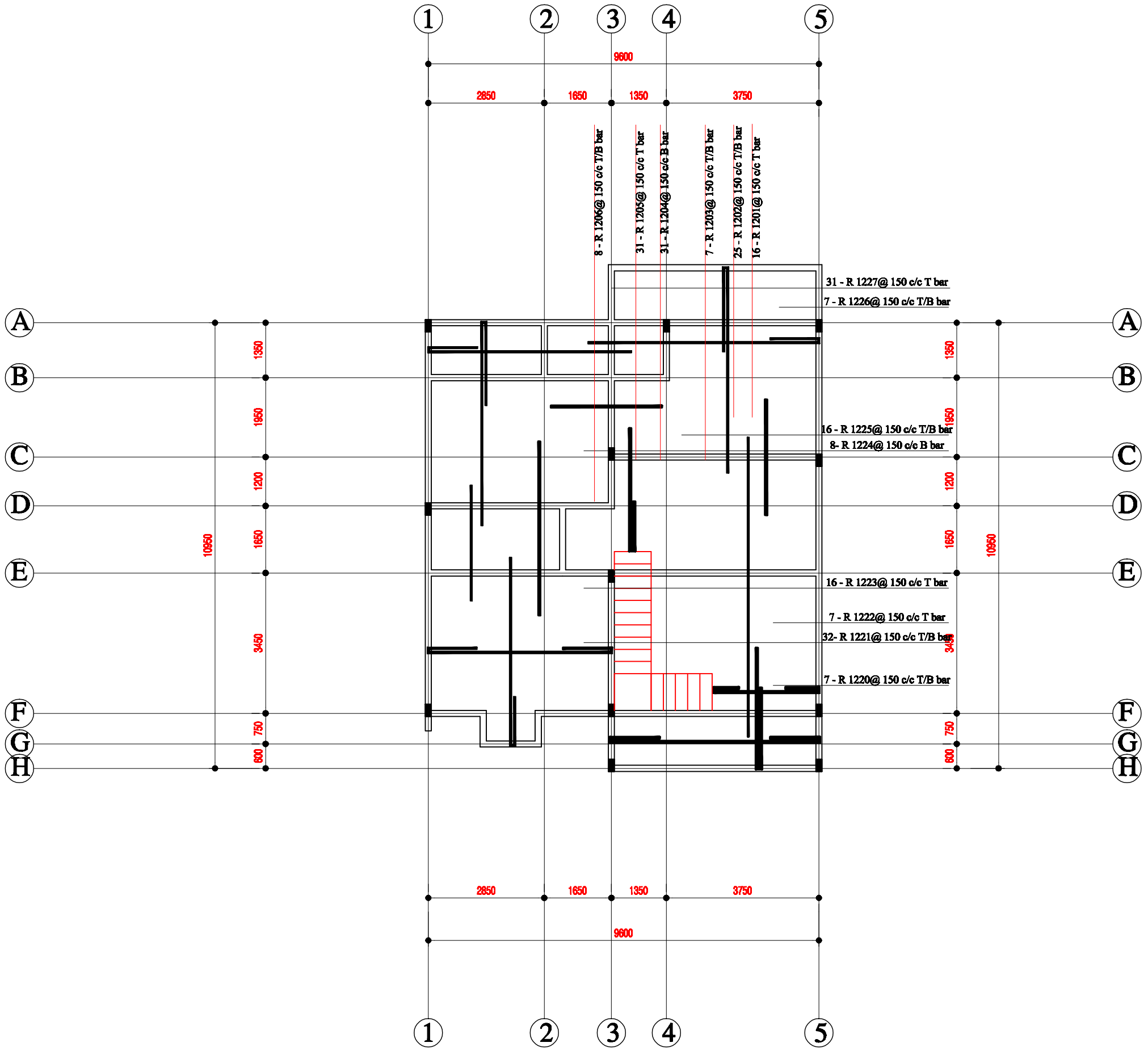

R.C SLAB DETAILS

NOTES

1. GRADE 50 WITH CRUSHING STRENGTH OF 25/MM2 AT 28 DAYS.
2. 50 BLINDING TO BE UNDER ALL COLUMNS FOOTING.
3. CONCRETE COVERS AS FOLLOWS =

a. FOOTING 50mm

b. COLUMNS 25mm

c. STAIRCASE..... 25mm

d. BEAMS 25mm

e. SLAB 25mm

STRUCTURAL DRAWING

CLIENT :

GA NORTH MUNICIPAL ASSEMBLY

LOCATION :

AFIAMAN

DESCRIPTION

R.C SLAB DETAILS

SCALE 1:100

ST

10

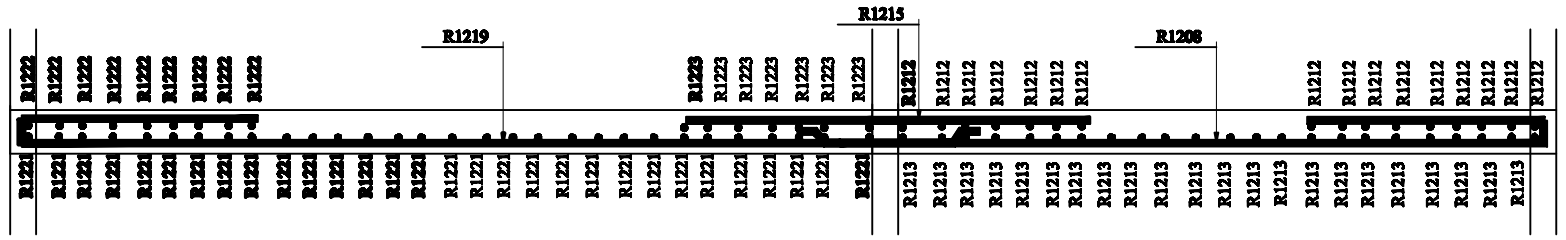

RC.SLAB DETAILS SECTION. 1-1.

SCALE 1:30

RC.DETAIL OF SLAB
BENDING SCHEDULE

BAR MARK	DIA.	QTY.	LENGTH	SHAPE
R1201	R12mm	21	5250	STRAIGHT
R1202	R12mm	19	5200	100 / 1200 / 3600
R1203	R12mm	30	6550	100 / 1200 / 5250
R1204	R12mm	22	3300	STRAIGHT
R1205	R12mm	30	4000	STRAIGHT
R1206	R12mm	11	4300	100 / 1725 / 2475
R1207	R12mm	11	5100	STRAIGHT
R1208	R12mm	30	5350	1200 / 100 / 4050
R1209	R12mm	18	6850	100 / 1200 / 5550
R12010	R12mm	11	3750	STRAIGHT
R12011	R12mm	11	4500	STRAIGHT
R12012	R12mm	11	6000	STRAIGHT
R12013	R12mm	19	5650	100 / 2492 / 3150
R12014	R12mm	30	2400	STRAIGHT
R12015	R12mm	24	4050	STRAIGHT
R12016	R12mm	38	8450	100 / 1200 / 1200 / 100 / 5850
R12017	R12mm	28	6550	100 / 1200 / 5250
R12018	R12mm	28	6300	STRAIGHT
R12019	R12mm	57	7600	100 / 1200 / 6300
R12020	R12mm	57	8550	100 / 1200 / 1200 / 100 / 5850
R12021	R12mm	41	7600	100 / 1200 / 1200 / 100 / 5850
R12022	R12mm	37	3600	STRAIGHT
R12023	R12mm	21	5850	STRAIGHT
R12024	R12mm	13	4050	STRAIGHT
R12025	R12mm	37	3650	100 / 1500 / 2250
R12026	R12mm	19	6250	100 / 1200 / 1200 / 100 / 3750
R12027	R12mm	19	4200	STRAIGHT

STRUCTURAL DRAWING

CLIENT :

GA NORTH MUNICIPAL ASSEMBLY

LOCATION :

AFIAMAN

DESCRIPTION

R.C SLAB DETAILS

SCALE 1:100

ST | 11