ARCHITECTURAL DRAWING

PROPOSED TEMPORAL OPEN SHED FACILITY

LOCATION: **AFIFE , VOLTA REGION.**

Client

KETU NORTH MUNICIPALITY, VOLTA REGION

JULY. 2026

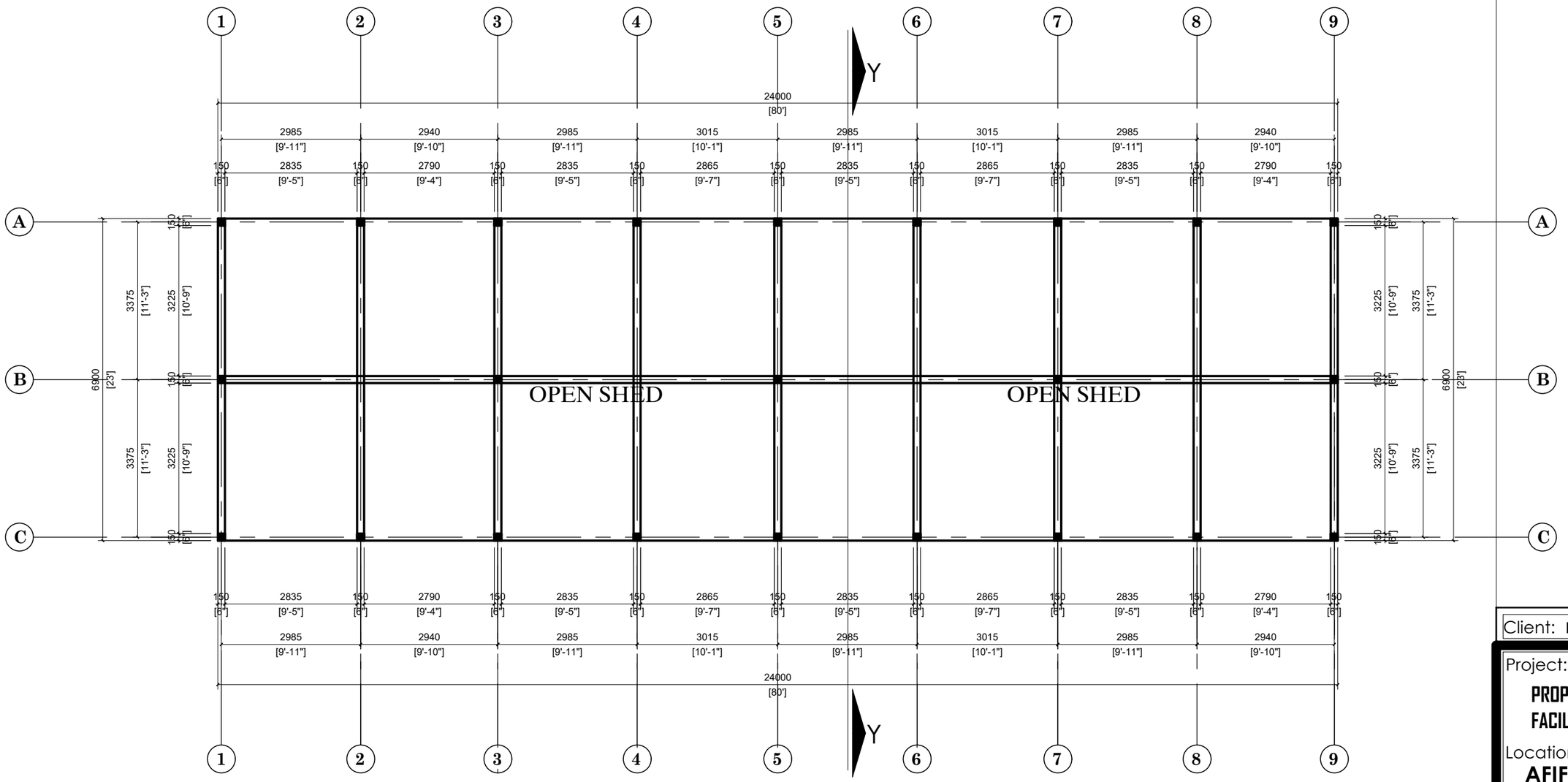

Client: KETU NORTH MUNICIPAL ASSEMBLY

Project:
PROPOSED TEMPORAL OPEN SHED FACILITY

Location:
AFIFE

Title:
GROUND PLAN

Designed by:

Drawn by:

Sheet No.:
02

Scale: **1:100**

Date:

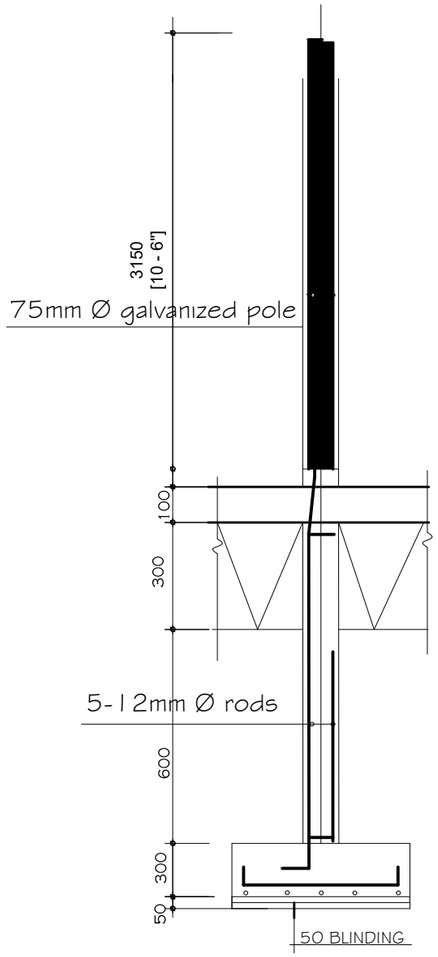

TYPICAL COLUMN
(TYPE 2.)

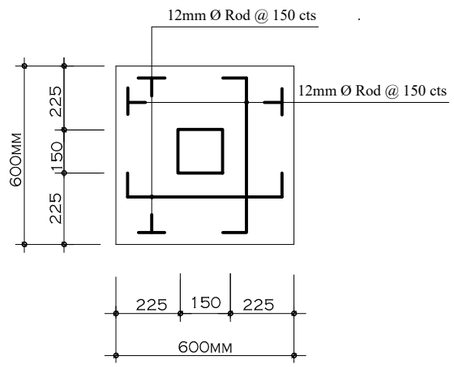

COLUMN BASE
No OFF 27

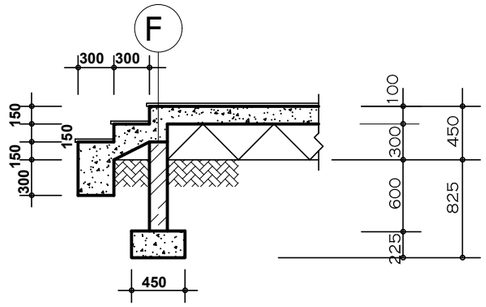

DETAIL 01 - 01

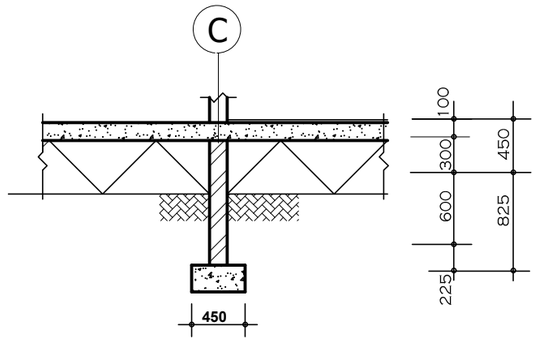

DETAIL 02 - 02

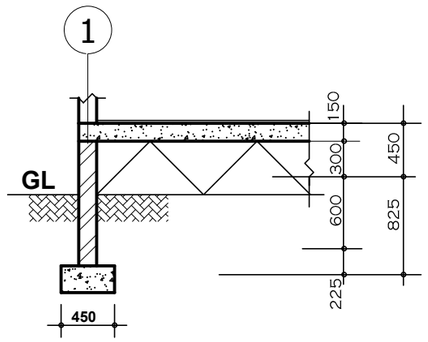

DETAIL 03 - 03

NOTES

1. ALL DIMENSIONS ARE IN MILLIMETERS AND FEET

Client: **KETU NORTH MUNICIPAL ASSEMBLY**

Project:
PROPOSED TEMPORAL OPEN SHED FACILITY

Location:
AFIFE

Title:
COLUMNS DETAILS

Designed by:

Drawn by:

Sheet No.:
04

Scale: **1:100**

Date:

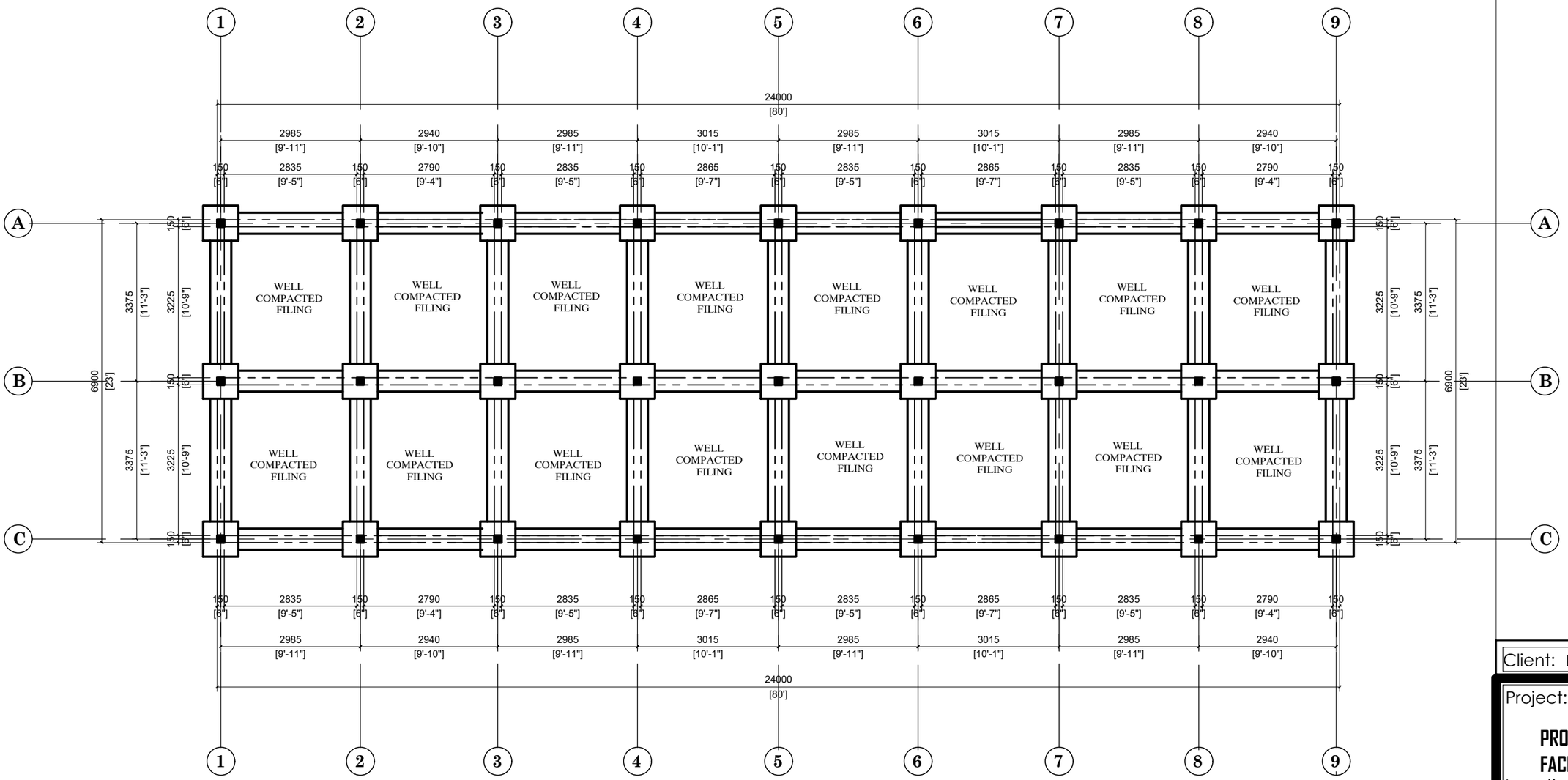

Client: KETU NORTH MUNICIPAL ASSEMBLY

Project:

PROPOSED TEMPORAL OPEN SHED FACILITY

Location:

AFIFE

Title:

FOUNDATION PLAN

Designed by:

Drawn by:

Sheet No.:

03

Scale: **1:100**

Date:

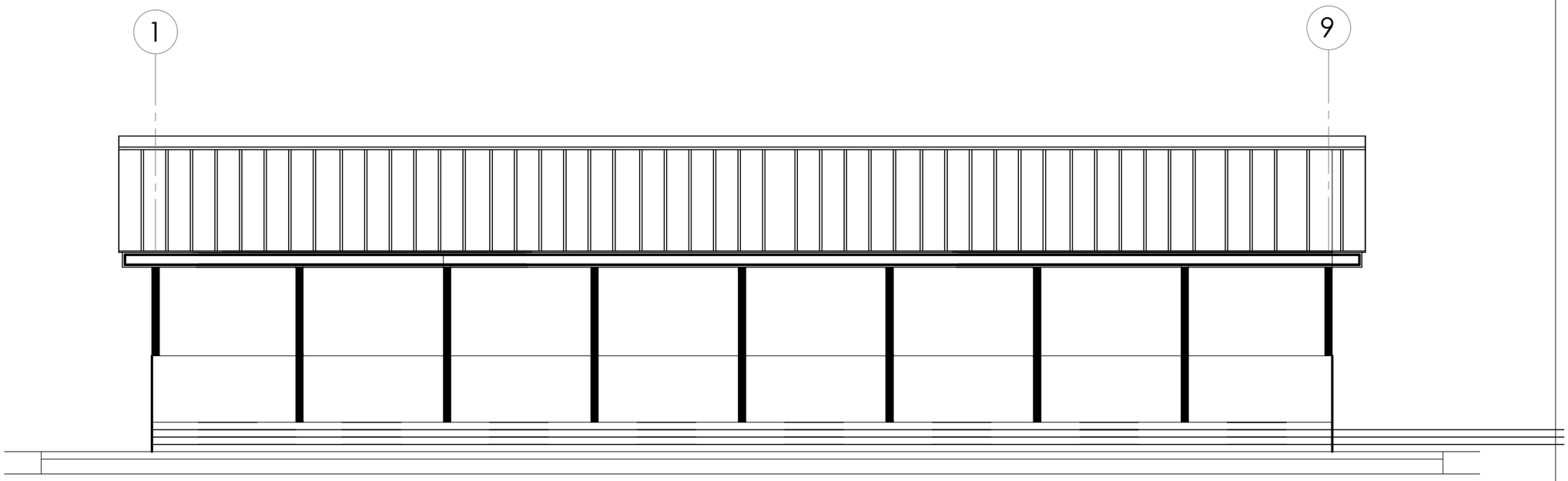

FRONT ELEVATION

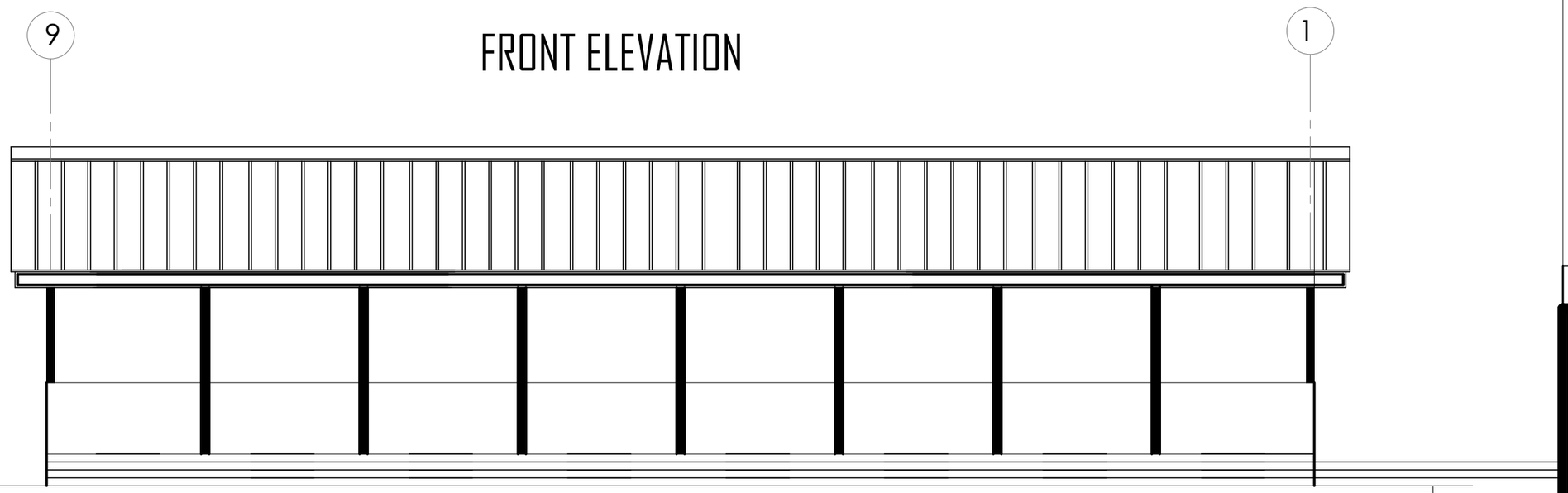

REAR ELEVATION

NOTES

1. ALL DIMENSIONS ARE IN MILLIMETERS

Client: KETU NORTH MUNICIPAL ASSEMBLY

Project:
PROPOSED TEMPORAL OPEN SHED FACILITY

Location:
AFIFE

Title:
ELEVATION

Designed by:

Drawn by:

Sheet No.:
05

Scale: **1:100**

Date:

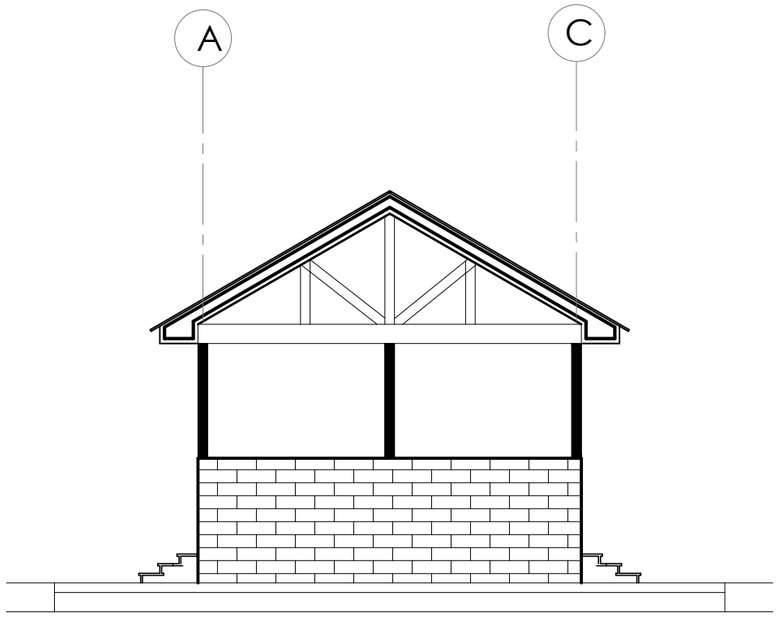

LEFT ELEVATION

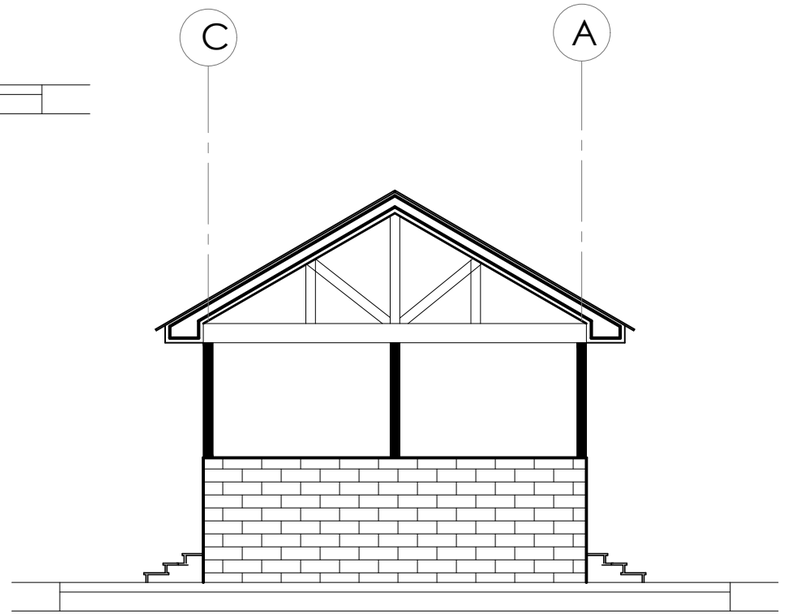

RIGHT ELEVATION

NOTES

1. ALL DIMENSIONS ARE IN MILLIMETERS

Client: KETU NORTH MUNICIPAL ASSEMBLY

Project:
PROPOSED TEMPORAL OPEN SHED FACILITY

Location:
AFIFE

Title:
ELEVATION

Designed by:

Drawn by:

Sheet No.:
06

Scale: **1:100**

Date:

NOTES

Roofing Line

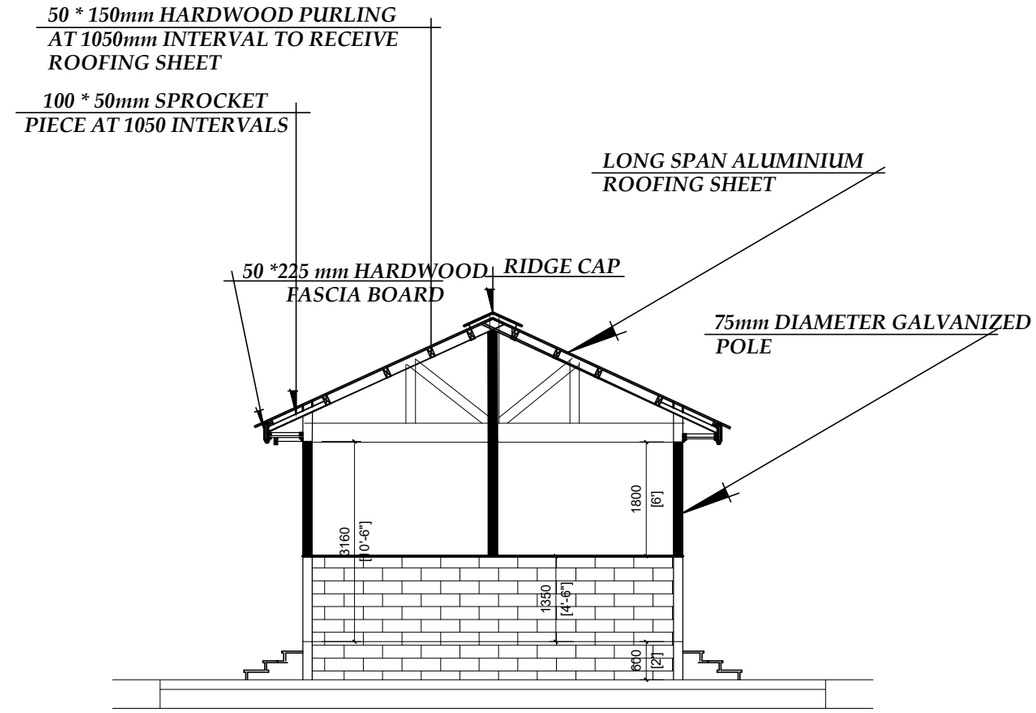

SECTION Y-Y

Client: AKOMDIE ABEDNEGO STEPHEN

Project:

PROPOSED TEMPORAL OPEN SHED FACILITY

Location:

AFIFE

Title:

SECTION & ROOF PLAN

Designed by:

Drawn by:

Sheet No.:

07

Scale: **1:100**

Date: