ARCHITECTURAL DRAWINGS

PROJECT.

PROPOSED THREE UNIT CLASSROOM BLOCK

CLIENT.

GHANA EDUCATION SERVICE

AT.

NORTH TONGU DISTRICT

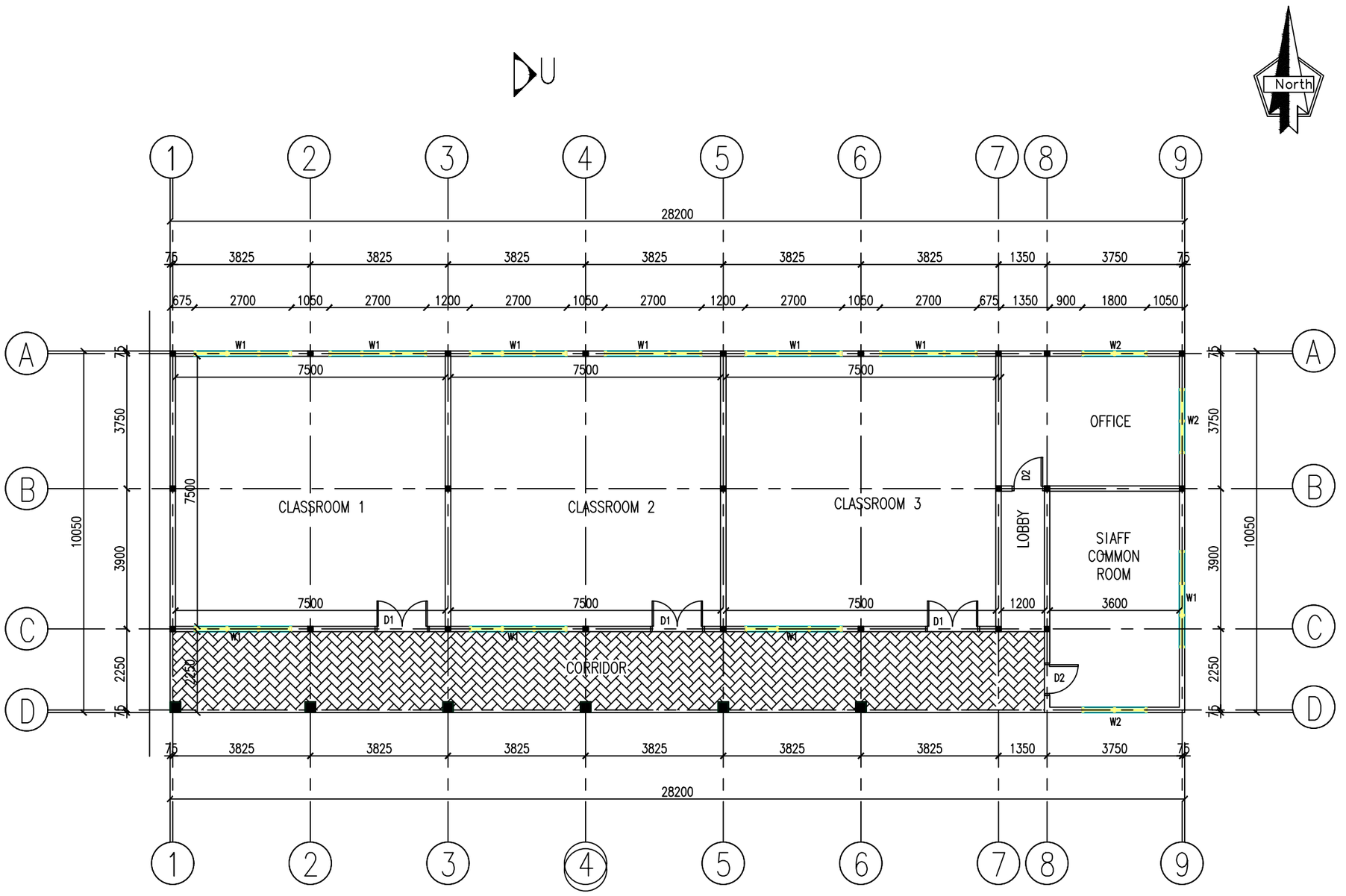

GROUND FLOOR PLAN

THIS IS AN AUTOCAD GENERATED DRAWING. ALL DIMENSIONS AND LEVELS TO BE CHECKED AND VERIFIED ON SITE BY THE CONTRACTOR PRIOR TO COMMENCING ANY WORK

FIGURED DIMENTIONS ARE TO TAKE PREFERENCE TO SCALING. ALL DISCREPANCIES ON DRAWING OR INTENDED VARIATION ON DRAWING ARE TO BE CLEARED WITH ARCHITECTS PRIOR COMMENCING ANY SUCH WORK.

IT IS THE INTENT OF THE ARCHITECT THAT THIS WORK IS IN CONFORMANCE WITH ALL REQUIREMENT OF THE BUILDING AUTHORITIES HAVING JURIDITION OVER THIS TYPE OF CONSTRUCTION AND OCCUPANCY.ALL CONTRACTORS SHALL DO THIER WORK IN CONFORMANCE WITH ALL APPLICABLE CODES AND REGULATIONS.

THE CONTRACTOR SHALL VERIFY ALL CONDITION AND DIMENTIONS AT THE JOBSITE PRIOR TO COMMENCING WORK. CONTRACOR MUST REPORT ALL DISCRIPANCIES IN THE DRAWING AND EXISTING CONDITION TO THE ARCHITECT PRIOR TO COMMENCING WORK. CONTRACTOR SHALL SUPPLY, LOCATE AND BUILD INTO THE WORK ALL INSERTS,ANCHORS,ANGLES,PLATES, OPENNIGS,SLEEVES, SLAB DEPRESSIONS,AND PITCH AS MAY BE REQUIRED TO ATTACH AND ACCOMODATE OTHER WORKS.

THESE DOCUMENTS AS INSTRUMENTS OF SERVICES ARE THE PROPERTY OF THE ARCHITECT AND MAY NOT BE USED OR REPRODUCED WITHOUT EXPRESSED WRITTEN CONSENT OF THE ARCHITECT.

ALL DETAILS AND SECTIONS SHOWN ON THE DRAWING ARE INTENDED TO BO TYPICAL AND SHALL BE CONSTRUCTED TO APPLY ANY SIMILAR SITUATION ELSEWHERE IN THE WORK EXPECT WHERE A DIFFERENT DETAILS IS SHOWN.

IT IS THE CONTRUCTOR SOLE RESPONSIBILITIES TO DETERMINE ERECTIONS PROCEDURE AND SEQUENCE TO INSURE THE SAFETY OF THE BUILDING AND ITS COMPONENT PARTS DURING ERECTION .

CLIENT:
GHANA EDUCATION SERVICE

LOCATION:
NORTH TONGU DISTRICT ASSEMBLY

DESCRIPTION:
GROUND PLAN

PROJECT:
PROPOSED THREE UNITS CLASS ROOMS BLOCK BUILDING

DATE: 2025

DRAWN BY:

SCALE:
1:100

SHEET NO:
S1

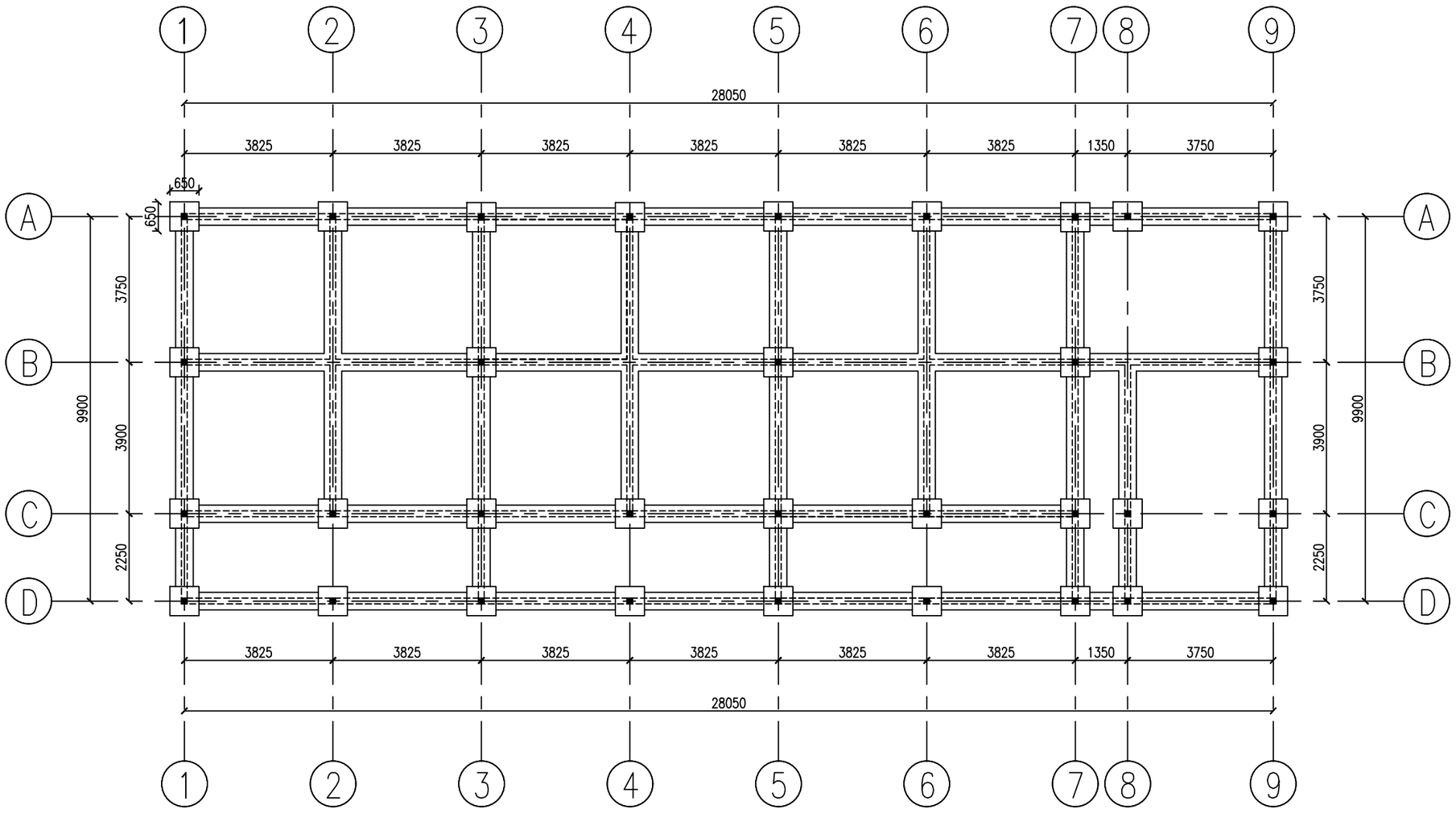

FOUNDATION PLAN

THIS IS AN AUTOCAD GENERATED DRAWING. ALL DIMENSIONS AND LEVELS TO BE CHECKED AND VERIFIED ON SITE BY THE CONTRACTOR PRIOR TO COMMENCING ANY WORK

FIGURED DIMENTIONS ARE TO TAKE PREFERENCE TO SCALING. ALL DISCREPANCIES ON DRAWING OR INTENDED VARIATION ON DRAWING ARE TO BE CLEARED WITH ARCHITECTS PRIOR COMMENCING ANY SUCH WORK.

IT IS THE INTENT OF THE ARCHITECT THAT THIS WORK IS IN CONFORMANCE WITH ALL REQUIREMENT OF THE BUILDING AUTHORITIES HAVING JURIDITION OVER THIS TYPE OF CONSTRUCTION AND OCCUPANCY.ALL CONTRACTORS SHALL DO THIER WORK IN CONFORMANCE WITH ALL APPLICABLE CODES AND REGULATIONS.

THE CONTRACTOR SHALL VERIFY ALL CONDITION AND DIMENTIONS AT THE JOBSITE PRIOR TO COMMENCING WORK. CONTRACOR MUST REPORT ALL DISCRIPANCIES IN THE DRAWING AND EXISTING CONDITION TO THE ARCHITECT PRIOR TO COMMENCING WORK. CONTRACTOR SHALL SUPPLY, LOCATE AND BUILD INTO THE WORK ALL INSERTS,ANCHORS,ANGLES,PLATES, OPENNIGS,SLEEVES, SLAB DEPRESSIONS,AND PITCH AS MAY BE REQUIRED TO ATTACH AND ACCOMODATE OTHER WORKS.

THESE DOCUMENTS AS INSTRUMENTS OF SERVICES ARE THE PROPERTY OF THE ARCHITECT AND MAY NOT BE USED OR REPRODUCED WITHOUT EXPRESSED WRITTEN CONSENT OF THE ARCHITECT.

ALL DETAILS AND SECTIONS SHOWN ON THE DRAWING ARE INTENDED TO BO TYPICAL AND SHALL BE CONSTRUCTED TO APPLY ANY SIMILAR SITUATION ELSEWHERE IN THE WORK EXPECT WHERE A DIFFERENT DETAILS IS SHOWN.

IT IS THE CONTRUCTOR SOLE RESPONSIBILITIES TO DETERMINE ERECTIONS PROCEDURE AND SEQUENCE TO INSURE THE SAFETY OF THE BUILDING AND ITS COMPONENT PARTS DURING ERECTION .

CLIENT:
GHANA EDUCATION SERVICE

LOCATION:
NORTH TONGU DISTRICT ASSEMBLY

DESCRIPTION:
FOUNDATION PLAN

PROJECT:
PROPOSED THREE UNITS CLASS ROOMS BLOCK BUILDING

DATE: 2025

DRAWN BY:

SCALE:
1:100

SHEET NO:
S1

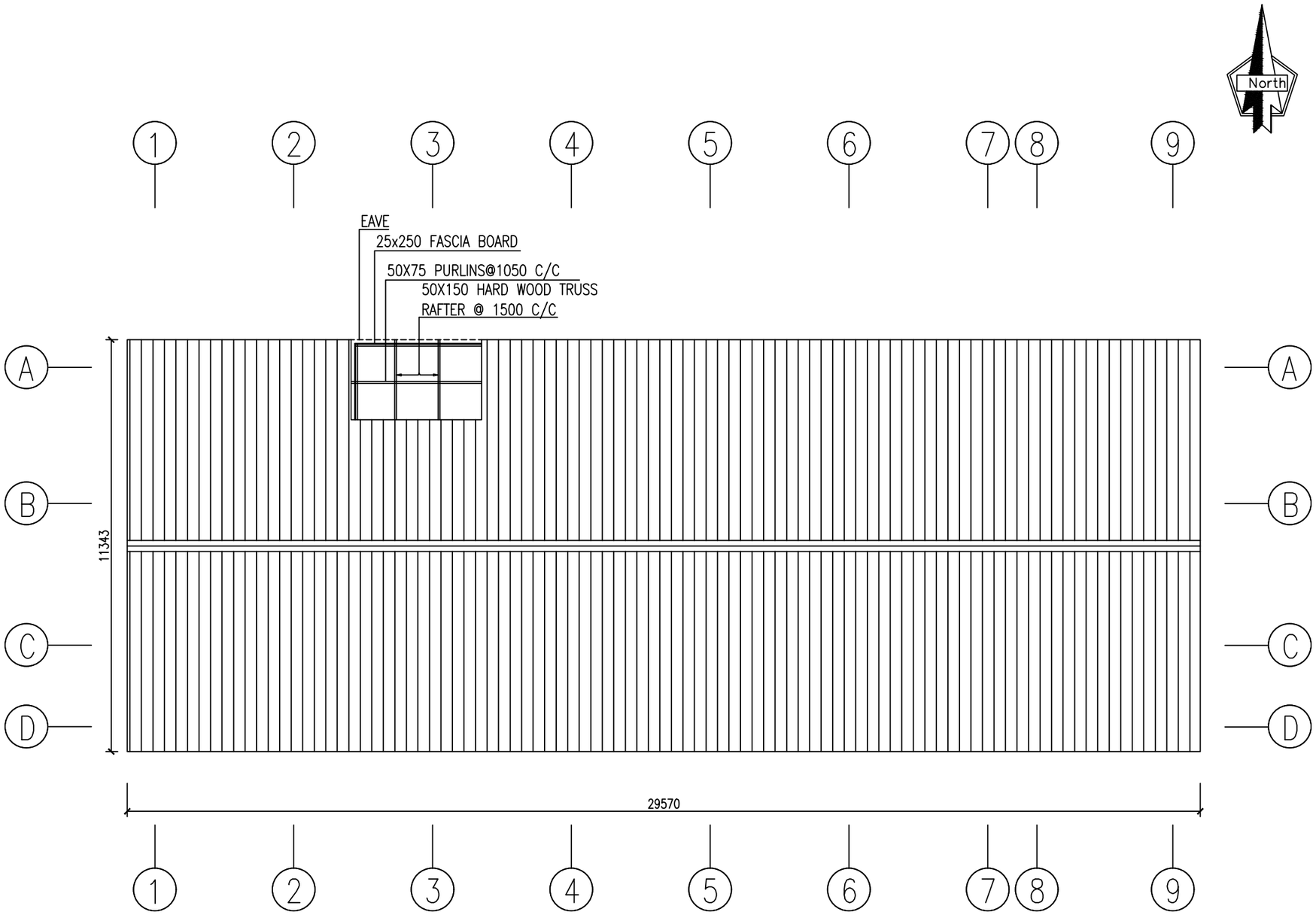

ROOF PLAN

THIS IS AN AUTOCAD GENERATED DRAWING. ALL DIMENSIONS AND LEVELS TO BE CHECKED AND VERIFIED ON SITE BY THE CONTRACTOR PRIOR TO COMMENCING ANY WORK

FIGURED DIMENTIONS ARE TO TAKE PREFERENCE TO SCALING. ALL DISCREPANCIES ON DRAWING OR INTENDED VARIATION ON DRAWING ARE TO BE CLEARED WITH ARCHITECTS PRIOR COMMENCING ANY SUCH WORK.

IT IS THE INTENT OF THE ARCHITECT THAT THIS WORK IS IN CONFORMANCE WITH ALL REQUIREMENT OF THE BUILDING AUTHORITIES HAVING JURIDITION OVER THIS TYPE OF CONSTRUCTION AND OCCUPANCY.ALL CONTRACTORS SHALL DO THIER WORK IN CONFORMANCE WITH ALL APPLICABLE CODES AND REGULATIONS.

THE CONTRACTOR SHALL VERIFY ALL CONDITION AND DIMENTIONS AT THE JOBSITE PRIOR TO COMMENCING WORK. CONTRACOR MUST REPORT ALL DISCRIPANCIES IN THE DRAWING AND EXISTING CONDITION TO THE ARCHITECT PRIOR TO COMMENCING WORK. CONTRACTOR SHALL SUPPLY, LOCATE AND BUILD INTO THE WORK ALL INSERTS,ANCHORS,ANGLES,PLATES, OPENNIGS,SLEEVES, SLAB DEPRESSIONS,AND PITCH AS MAY BE REQUIRED TO ATTACH AND ACCOMODATE OTHER WORKS.

THESE DOCUMENTS AS INSTRUMENTS OF SERVICES ARE THE PROPERTY OF THE ARCHITECT AND MAY NOT BE USED OR REPRODUCED WITHOUT EXPRESSED WRITTEN CONSENT OF THE ARCHITECT.

ALL DETAILS AND SECTIONS SHOWN ON THE DRAWING ARE INTENDED TO BO TYPICAL AND SHALL BE CONSTRUCTED TO APPLY ANY SIMILAR SITUATION ELSEWHERE IN THE WORK EXPECT WHERE A DIFFERENT DETAILS IS SHOWN.

IT IS THE CONTRUCTOR SOLE RESPONSIBILITIES TO DETERMINE ERECTIONS PROCEDURE AND SEQUENCE TO INSURE THE SAFETY OF THE BUILDING AND ITS COMPONENT PARTS DURING ERECTION.

CLIENT:
GHANA EDUCATION SERVICE

LOCATION:
NORTH TONGU DISTRICT ASSEMBLY

DESCRIPTION:
ROOF PLAN

PROJECT:
PROPOSED THREE UNITS CLASS ROOMS BLOCK BUILDING

DATE: 2025

DRAWN BY:

SCALE:
1:100

SHEET NO:
S1

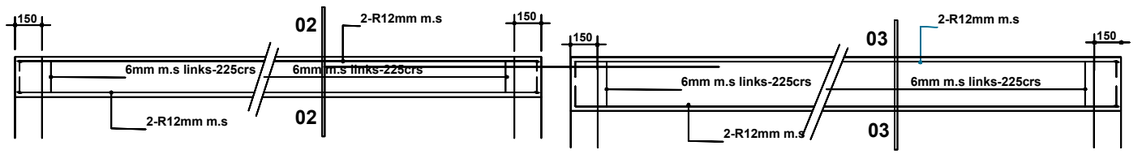

reinf. concrete lintel

scale 1:40

reinf. concrete lintel

scale 1:40

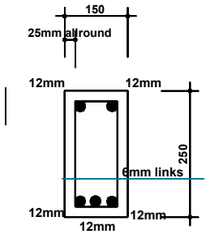

section 03-03

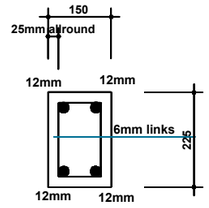

section 02-02

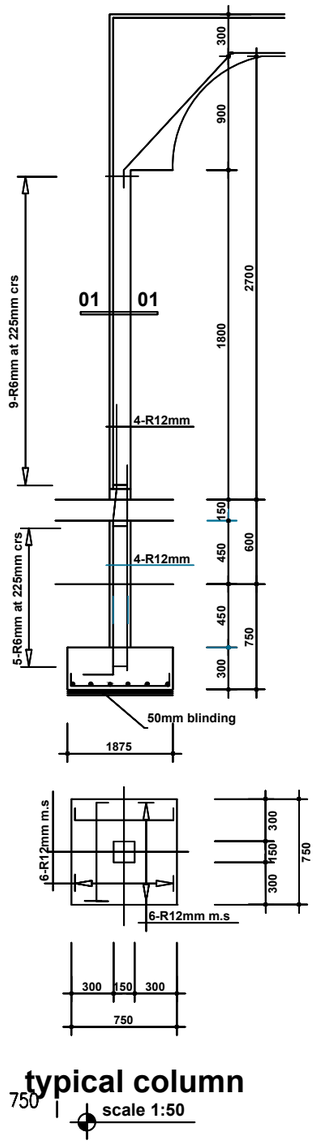

typical column

750 scale 1:50

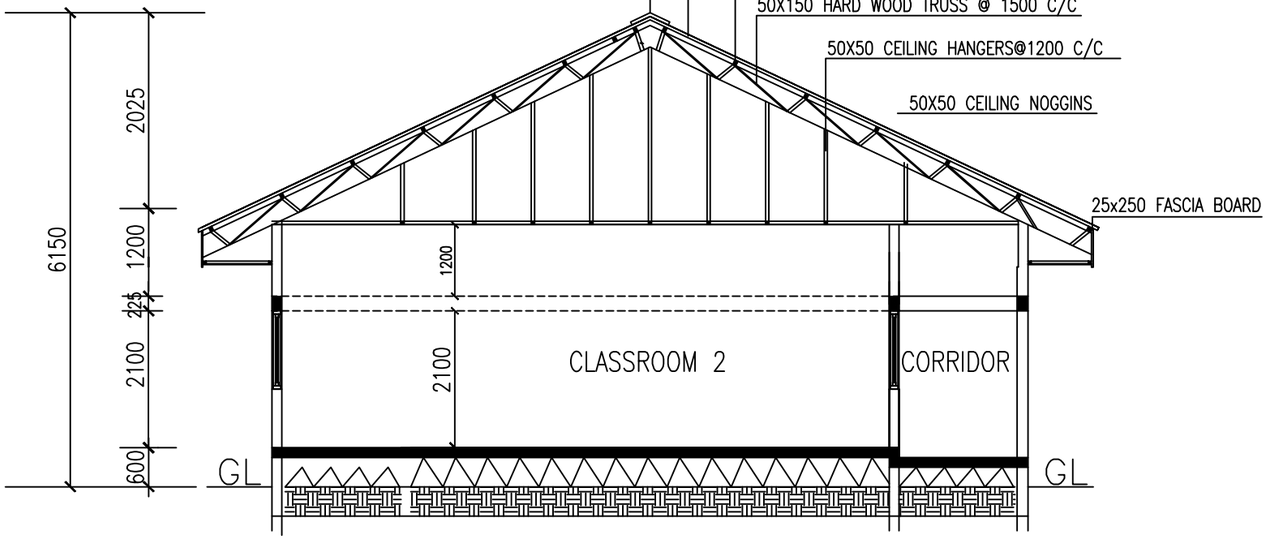

SECTION U-U

THIS IS AN AUTOCAD GENERATED DRAWING. ALL DIMENSIONS AND LEVELS TO BE CHECKED AND VERIFIED ON SITE BY THE CONTRACTOR PRIOR TO COMMENCING ANY WORK

FIGURED DIMENTIONS ARE TO TAKE PREFERENCE TO SCALING. ALL DISCREPANCIES ON DRAWING OR INTENDED VARIATION ON DRAWING ARE TO BE CLEARED WITH ARCHITECTS PRIOR COMMENCING ANY SUCH WORK.

IT IS THE INTENT OF THE ARCHITECT THAT THIS WORK IS IN CONFORMANCE WITH ALL REQUIREMENT OF THE BUILDING AUTHORITIES HAVING JURIDITION OVER THIS TYPE OF CONSTRUCTION AND OCCUPANCY.ALL CONTRACTORS SHALL DO THIER WORK IN CONFORMANCE WITH ALL APPLICABLE CODES AND REGULATIONS.

THE CONTRACTOR SHALL VERIFY ALL CONDITION AND DIMENTIONS AT THE JOBSITE PRIOR TO COMMENCING WORK. CONTRACOR MUST REPORT ALL DISCRIPANCIES IN THE DRAWING AND EXISTING CONDITION TO THE ARCHITECT PRIOR TO COMMENCING WORK. CONTRACTOR SHALL SUPPLY, LOCATE AND BUILD INTO THE WORK ALL INSERTS,ANCHORS,ANGLES,PLATES, OPENNIGS,SLEEVES, SLAB DEPRESSIONS,AND PITCH AS MAY BE REQUIRED TO ATTACH AND ACCOMODATE OTHER WORKS.

THESE DOCUMENTS AS INSTRUMENTS OF SERVICES ARE THE PROPERTY OF THE ARCHITECT AND MAY NOT BE USED OR REPRODUCED WITHOUT EXPRESSED WRITTEN CONSENT OF THE ARCHITECT.

ALL DETAILS AND SECTIONS SHOWN ON THE DRAWING ARE INTENDED TO BO TYPICAL AND SHALL BE CONSTRUCTED TO APPLY ANY SIMILAR SITUATION ELSEWHERE IN THE WORK EXPECT WHERE A DIFFERENT DETAILS IS SHOWN.

IT IS THE CONTRUCTOR SOLE RESPONSIBILITIES TO DETERMINE ERECTIONS PROCEDURE AND SEQUENCE TO INSURE THE SAFETY OF THE BUILDING AND ITS COMPONENT PARTS DURING ERECTION

CLIENT:
GHANA EDUCATION SERVICE

LOCATION:
NORTH TONGU DISTRICT ASSEMBLY

DESCRIPTION:
ROOF PLAN

PROJECT:
PROPOSED THREE UNITS CLASS ROOMS BLOCK BUILDING

DATE: 2025

DRAWN BY:

SCALE:
1:100

SHEET NO:
S1

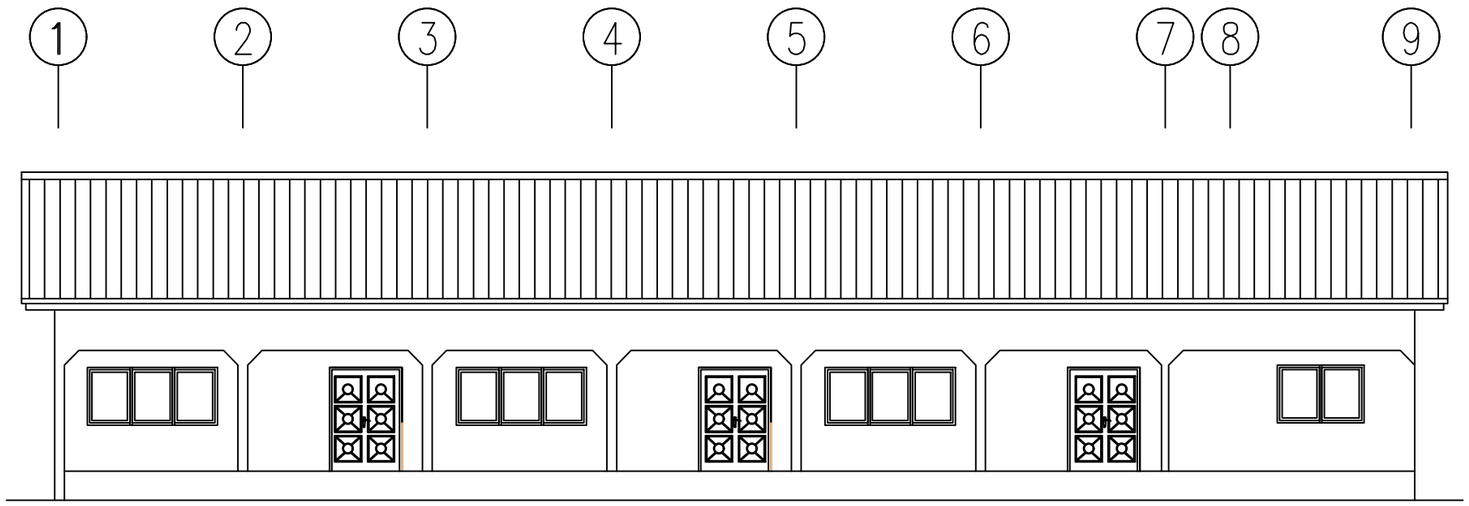

FRONT ELEVATION

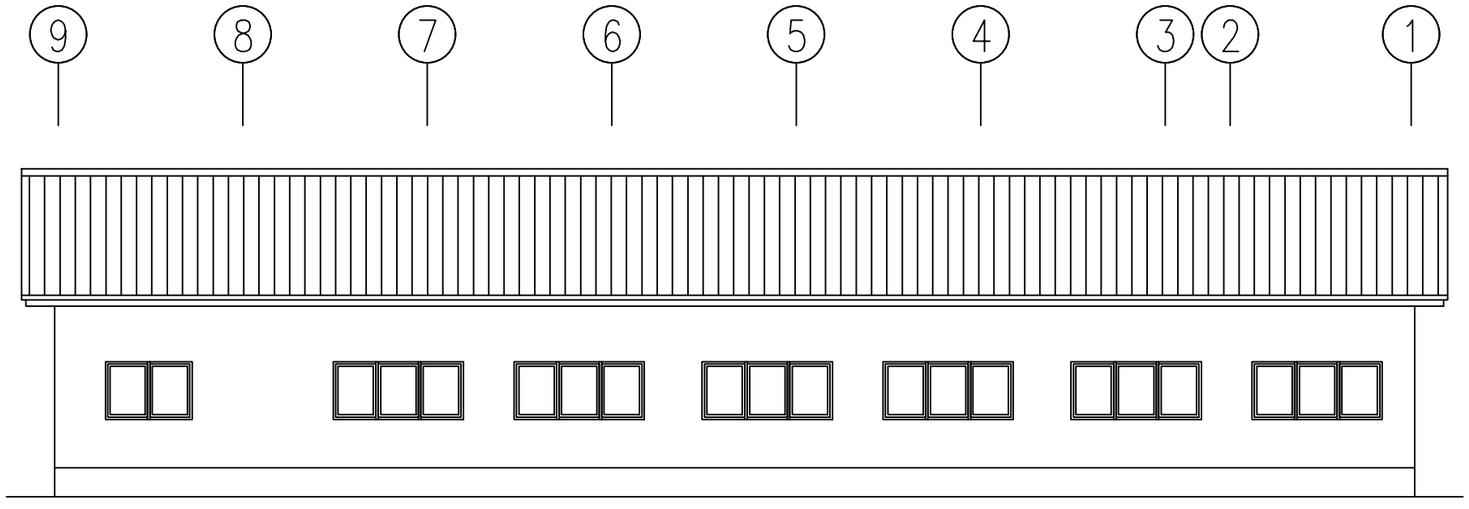

BACK ELEVATION



THIS IS AN AUTOCAD GENERATED DRAWING. ALL DIMENSIONS AND LEVELS TO BE CHECKED AND VERIFIED ON SITE BY THE CONTRACTOR PRIOR TO COMMENCING ANY WORK

FIGURED DIMENTIONS ARE TO TAKE PREFERENCE TO SCALING. ALL DISCREPANCIES ON DRAWING OR INTENDED VARIATION ON DRAWING ARE TO BE CLEARED WITH ARCHITECTS PRIOR COMMENCING ANY SUCH WORK.

IT IS THE INTENT OF THE ARCHITECT THAT THIS WORK IS IN CONFORMANCE WITH ALL REQUIREMENT OF THE BUILDING AUTHORITIES HAVING JURIDITION OVER THIS TYPE OF CONSTRUCTION AND OCCUPANCY.ALL CONTRACTORS SHALL DO THIER WORK IN CONFORMANCE WITH ALL APPLICABLE CODES AND REGULATIONS.

THE CONTRACTOR SHALL VERIFY ALL CONDITION AND DIMENTIONS AT THE JOBSITE PRIOR TO COMMENCING WORK. CONTRACOR MUST REPORT ALL DISCRIPANCIES IN THE DRAWING AND EXISTING CONDITION TO THE ARCHITECT PRIOR TO COMMENCING WORK. CONTRACTOR SHALL SUPPLY, LOCATE AND BUILD INTO THE WORK ALL INSERTS,ANCHORS,ANGLES,PLATES, OPENNIGS,SLEEVES, SLAB DEPRESSIONS,AND PITCH AS MAY BE REQUIRED TO ATTACH AND ACCOMODATE OTHER WORKS.

THESE DOCUMENTS AS INSTRUMENTS OF SERVICES ARE THE PROPERTY OF THE ARCHITECT AND MAY NOT BE USED OR REPRODUCED WITHOUT EXPRESSED WRITTEN CONSENT OF THE ARCHITECT.

ALL DETAILS AND SECTIONS SHOWN ON THE DRAWING ARE INTENDED TO BO TYPICAL AND SHALL BE CONSTRUCTED TO APPLY ANY SIMILAR SITUATION ELSEWHERE IN THE WORK EXPECT WHERE A DIFFERENT DETAILS IS SHOWN.

IT IS THE CONTRUCTOR SOLE RESPONSIBILITIES TO DETERMINE ERECTIONS PROCEDURE AND SEQUENCE TO INSURE THE SAFETY OF THE BUILDING AND ITS COMPONENT PARTS DURING ERECTION

CLIENT:
GHANA EDUCATION SERVICE

LOCATION:
NORTH TONGU DISTRICT ASSEMBLY

DESCRIPTION:
ROOF PLAN

PROJECT:
PROPOSED THREE UNITS CLASS ROOMS BLOCK BUILDING

DATE: 2025

DRAWN BY:

SCALE:
1:100

SHEET NO:
S1

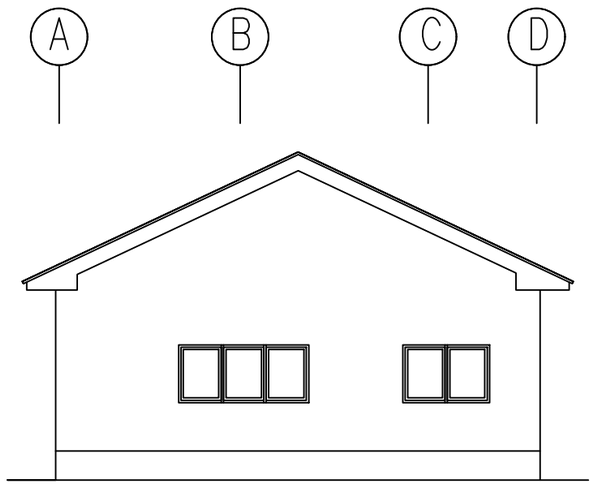

RIGHT ELEVATION

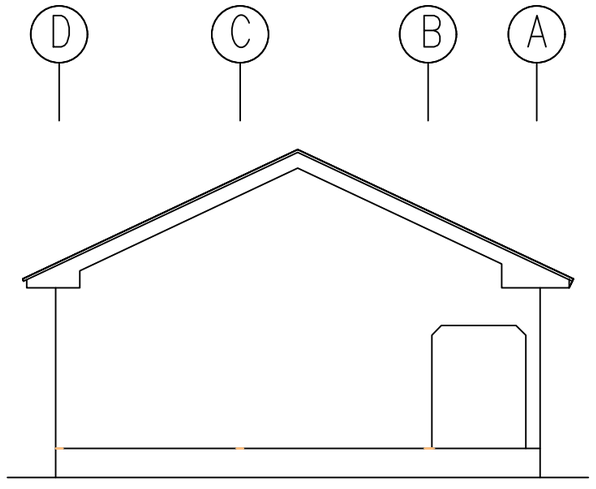

LEFT ELEVATION



THIS IS AN AUTOCAD GENERATED DRAWING. ALL DIMENSIONS AND LEVELS TO BE CHECKED AND VERIFIED ON SITE BY THE CONTRACTOR PRIOR TO COMMENCING ANY WORK

FIGURED DIMENTIONS ARE TO TAKE PREFERENCE TO SCALING. ALL DISCREPANCIES ON DRAWING OR INTENDED VARIATION ON DRAWING ARE TO BE CLEARED WITH ARCHITECTS PRIOR COMMENCING ANY SUCH WORK.

IT IS THE INTENT OF THE ARCHITECT THAT THIS WORK IS IN CONFORMANCE WITH ALL REQUIREMENT OF THE BUILDING AUTHORITIES HAVING JURIDITION OVER THIS TYPE OF CONSTRUCTION AND OCCUPANCY.ALL CONTRACTORS SHALL DO THIER WORK IN CONFORMANCE WITH ALL APPLICABLE CODES AND REGULATIONS.

THE CONTRACTOR SHALL VERIFY ALL CONDITION AND DIMENTIONS AT THE JOBSITE PRIOR TO COMMENCING WORK. CONTRACOR MUST REPORT ALL DISCRIPANCIES IN THE DRAWING AND EXISTING CONDITION TO THE ARCHITECT PRIOR TO COMMENCING WORK. CONTRACTOR SHALL SUPPLY, LOCATE AND BUILD INTO THE WORK ALL INSERTS,ANCHORS,ANGLES,PLATES, OPENNIGS,SLEEVES, SLAB DEPRESSIONS,AND PITCH AS MAY BE REQUIRED TO ATTACH AND ACCOMODATE OTHER WORKS.

THESE DOCUMENTS AS INSTRUMENTS OF SERVICES ARE THE PROPERTY OF THE ARCHITECT AND MAY NOT BE USED OR REPRODUCED WITHOUT EXPRESSED WRITTEN CONSENT OF THE ARCHITECT.

ALL DETAILS AND SECTIONS SHOWN ON THE DRAWING ARE INTENDED TO BO TYPICAL AND SHALL BE CONSTRUCTED TO APPLY ANY SIMILAR SITUATION ELSEWHERE IN THE WORK EXPECT WHERE A DIFFERENT DETAILS IS SHOWN.

IT IS THE CONTRUCTOR SOLE RESPONSIBILITIES TO DETERMINE ERECTIONS PROCEDURE AND SEQUENCE TO INSURE THE SAFETY OF THE BUILDING AND ITS COMPONENT PARTS DURING ERECTION

CLIENT:
GHANA EDUCATION SERVICE

LOCATION:
NORTH TONGU DISTRICT ASSEMBLY

DESCRIPTION:
ROOF PLAN

PROJECT:
PROPOSED THREE UNITS CLASS ROOMS BLOCK BUILDING

DATE: 2025

DRAWN BY:

SCALE:
1:100

SHEET NO:
S1

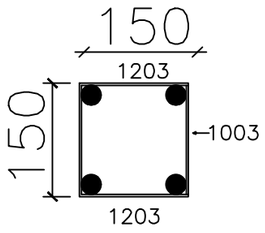

SECT. 03–03

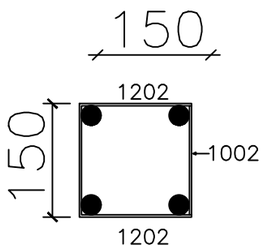

SECT. 02–02

COLUMN BENDING SCHEDULE				
BAR MARK	DIA.	LENG.	QTY.	SHAPE
1201	12	850	580	150 550 150
1001	10	560	870	90 90
1201	12	2250	232	150 2100

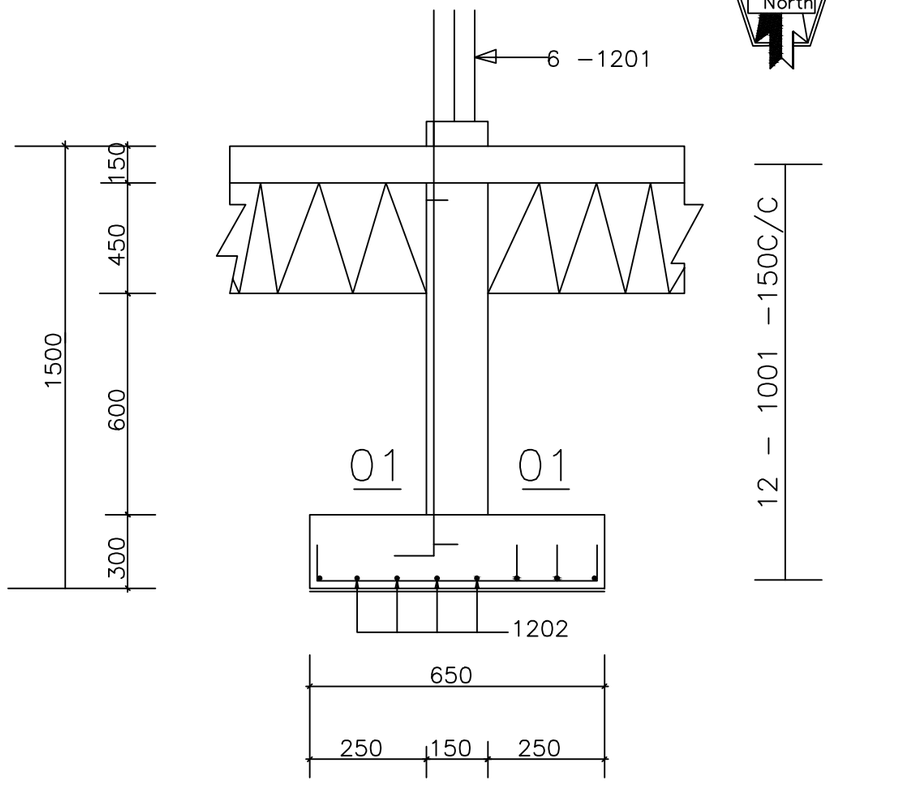

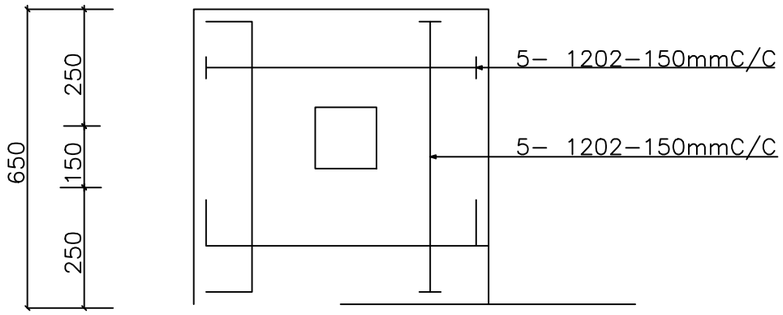

FTG.COL(58nr)

FOOTINGS & R.C.COLUMN DETAILS



THIS IS AN AUTOCAD GENERATED DRAWING. ALL DIMENSIONS AND LEVELS TO BE CHECKED AND VERIFIED ON SITE BY THE CONTRACTOR PRIOR TO COMMENCING ANY WORK

FIGURED DIMENTIONS ARE TO TAKE PREFERENCE TO SCALING. ALL DISCREPANCIES ON DRAWING OR INTENDED VARIATION ON DRAWING ARE TO BE CLEARED WITH ARCHITECTS PRIOR COMMENCING ANY SUCH WORK.

IT IS THE INTENT OF THE ARCHITECT THAT THIS WORK IS IN CONFORMANCE WITH ALL REQUIREMENT OF THE BUILDING AUTHORITIES HAVING JURIDITION OVER THIS TYPE OF CONSTRUCTION AND OCCUPANCY.ALL CONTRACTORS SHALL DO THIER WORK IN CONFORMANCE WITH ALL APPLICABLE CODES AND REGULATIONS.

THE CONTRACTOR SHALL VERIFY ALL CONDITION AND DIMENTIONS AT THE JOBSITE PRIOR TO COMMENCING WORK. CONTRACOR MUST REPORT ALL DISCRIPANCIES IN THE DRAWING AND EXISTING CONDITION TO THE ARCHITECT PRIOR TO COMMENCING WORK. CONTRACTOR SHALL SUPPLY, LOCATE AND BUILD INTO THE WORK ALL INSERTS,ANCHORS,ANGLES,PLATES, OPENNIGS,SLEEVES, SLAB DEPRESSIONS,AND PITCH AS MAY BE REQUIRED TO ATTACH AND ACCOMODATE OTHER WORKS.

THESE DOCUMENTS AS INSTRUMENTS OF SERVICES ARE THE PROPERTY OF THE ARCHITECT AND MAY NOT BE USED OR REPRODUCED WITHOUT EXPRESSED WRITTEN CONSENT OF THE ARCHITECT.

ALL DETAILS AND SECTIONS SHOWN ON THE DRAWING ARE INTENDED TO BO TYPICAL AND SHALL BE CONSTRUCTED TO APPLY ANY SIMILAR SITUATION ELSEWHERE IN THE WORK EXPECT WHERE A DIFFERENT DETAILS IS SHOWN.

IT IS THE CONTRUCTOR SOLE RESPONSIBILITIES TO DETERMINE ERECTIONS PROCEDURE AND SEQUENCE TO INSURE THE SAFETY OF THE BUILDING AND ITS COMPONENT PARTS DURING ERECTION.

CLIENT:
GHANA EDUCATION SERVICE

LOCATION:
NORTH TONGU DISTRICT ASSEMBLY

DESCRIPTION:
ROOF PLAN

PROJECT:
PROPOSED THREE UNITS CLASS ROOMS BLOCK BUILDING

DATE: 2025

DRAWN BY:

SCALE:
1:100

SHEET NO:
S1

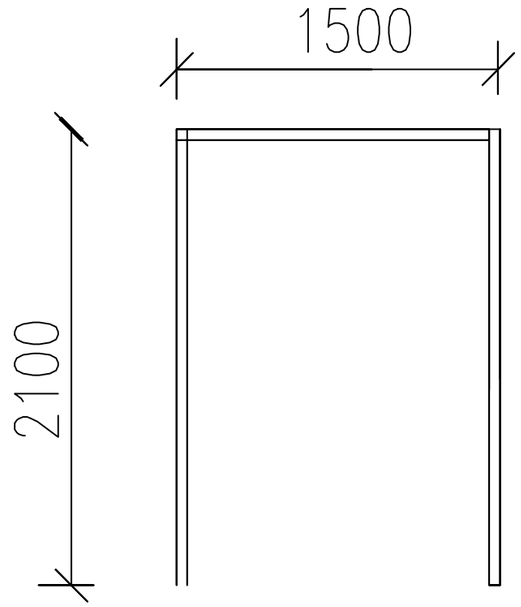

D1 QTY.3Nr

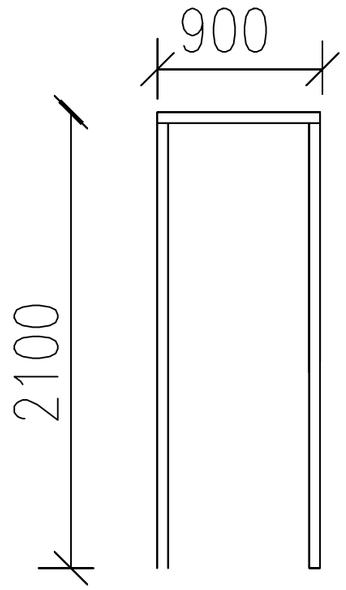

D2 QTY.2Nr

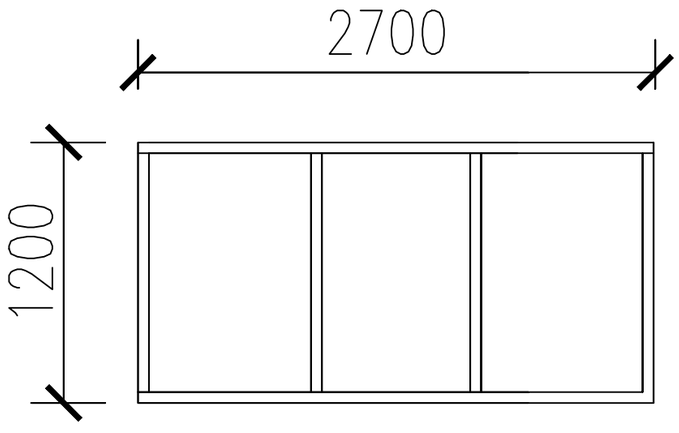

W1 QTY.10Nr

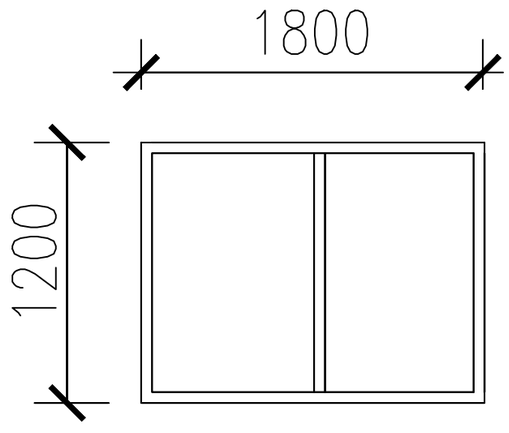

W2 QTY.3Nr



THIS IS AN AUTOCAD GENERATED DRAWING. ALL DIMENSIONS AND LEVELS TO BE CHECKED AND VERIFIED ON SITE BY THE CONTRACTOR PRIOR TO COMMENCING ANY WORK

FIGURED DIMENTIONS ARE TO TAKE PREFERENCE TO SCALING. ALL DISCREPANCIES ON DRAWING OR INTENDED VARIATION ON DRAWING ARE TO BE CLEARED WITH ARCHITECTS PRIOR COMMENCING ANY SUCH WORK.

IT IS THE INTENT OF THE ARCHITECT THAT THIS WORK IS IN CONFORMANCE WITH ALL REQUIREMENT OF THE BUILDING AUTHORITIES HAVING JURIDITION OVER THIS TYPE OF CONSTRUCTION AND OCCUPANCY.ALL CONTRACTORS SHALL DO THIER WORK IN CONFORMANCE WITH ALL APPLICABLE CODES AND REGULATIONS.

THE CONTRACTOR SHALL VERIFY ALL CONDITION AND DIMENTIONS AT THE JOBSITE PRIOR TO COMMENCING WORK. CONTRACOR MUST REPORT ALL DISCRIPANCIES IN THE DRAWING AND EXISTING CONDITION TO THE ARCHITECT PRIOR TO COMMENCING WORK. CONTRACTOR SHALL SUPPLY, LOCATE AND BUILD INTO THE WORK ALL INSERTS,ANCHORS,ANGLES,PLATES, OPENNIGS,SLEEVES, SLAB DEPRESSIONS,AND PITCH AS MAY BE REQUIRED TO ATTACH AND ACCOMODATE OTHER WORKS.

THESE DOCUMENTS AS INSTRUMENTS OF SERVICES ARE THE PROPERTY OF THE ARCHITECT AND MAY NOT BE USED OR REPRODUCED WITHOUT EXPRESSED WRITTEN CONSENT OF THE ARCHITECT.

ALL DETAILS AND SECTIONS SHOWN ON THE DRAWING ARE INTENDED TO BO TYPICAL AND SHALL BE CONSTRUCTED TO APPLY ANY SIMILAR SITUATION ELSEWHERE IN THE WORK EXPECT WHERE A DIFFERENT DETAILS IS SHOWN.

IT IS THE CONTRUCTOR SOLE RESPONSIBILITIES TO DETERMINE ERECTIONS PROCEDURE AND SEQUENCE TO INSURE THE SAFETY OF THE BUILDING AND ITS COMPONENT PARTS DURING ERECTION

CLIENT:
GHANA EDUCATION SERVICE

LOCATION:
NORTH TONGU DISTRICT ASSEMBLY

DESCRIPTION:
ROOF PLAN

PROJECT:
PROPOSED THREE UNITS CLASS ROOMS BLOCK BUILDING

DATE: 2025

DRAWN BY:

SCALE:
1:100

SHEET NO:
S1